Friction loss of water in feet of head per 100 foot length of pipe.

1. Calculate water depth in inches:

A.	Actual water depth in injector	=	_____
B.	Add ½" of water per 90° elbow	=	_____
C.	Add ⅛" of water per 45° elbow	=	_____
D.	Add 1" of water per 10 feet of 2" pipe	=	_____
E.	Add 4" of water per ½" spring check valve	=	_____
	TOTAL INCHES OF WATER	=	_____

2. Find the airflow or SCFM provided by your blower:

A. On the **Blower Performance Chart**, find the number that corresponds to the **total inches of water** needed.
B. Read across the chart until you **intersect the horsepower (HP)**, then go down for SCFM.
C. Take total SCFM and divide by 10 to get corresponding hole sizes.

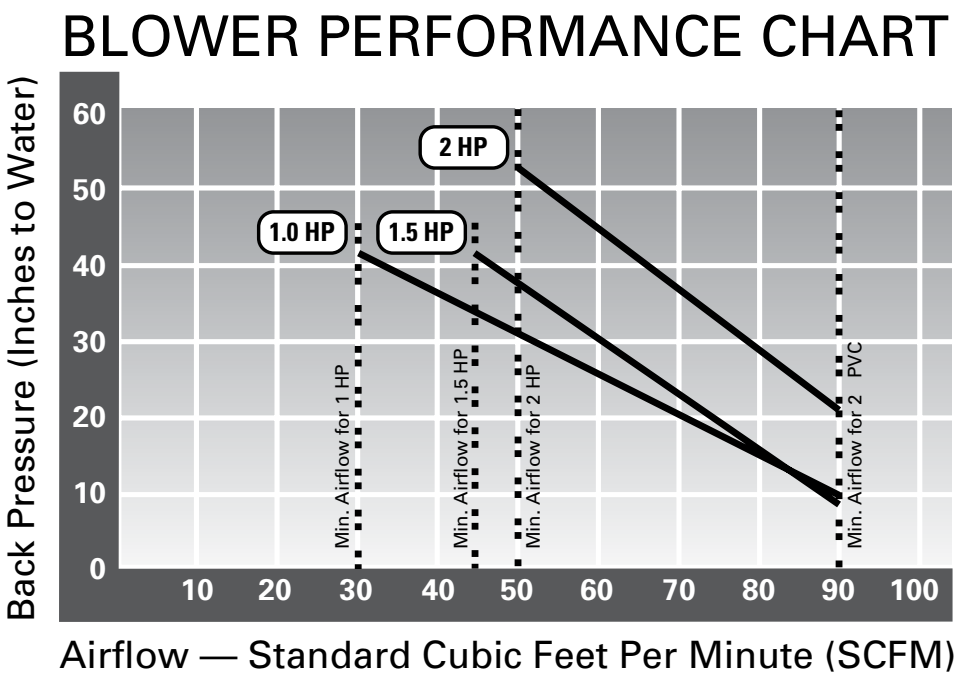

3. Calculate the number of holes by using the Air Hole Sizing Chart:

Air Hole Sizing Chart

Air Hole Size	Number of Holes Needed per 10 SCFM
⅛"	24
5/32"	15
3/16"	11
¼"	6
5/16"	4
Jet	1

Hole Saw Sizes

STORM JETS

Jets - Adjustable Cluster Storm	1 ½"
Jets - Mini Storm	
Flat Gasket	2 3/16"
Grommet Gasket	2 ¼"
Jets - Poly Storm	
Flat Gasket	2 5/8"
Grommet Gasket	2 11/16"
Jets - Power Storm	
Flat Gasket	3 ¾"
Grommet Gasket	3 7/8"
Jets - Mega Storm with Flat Gasket	4 ¾"

JETS

Jets - Euro	1 1/16"
Jets - Fog	9/16"
Jets - Jumbo	5 ¾"
Jets - Jumbo Storm	5 ¾"
Jets - Master Massage	5 ¾"
Jets - Old Faithful	4 ¾"
Jets - Ozone/Cluster	1"
Jets - Poly	2 5/8"
Jets - Turbo	3 ¼"

SUCTIONS

Suction - Lo-Pro and Hi-Flo/Ultra High Flo	
Flat Gasket	2 3/8"
Grommet Gasket	2 ½"
Suction - Super Hi-Flo/Designer Pro/Ultra High Flo	
Flat Gasket	3 ¼"
Grommet Gasket	3 7/16"

AIR COMPONENTS

Air Bleed	1 5/16"
Air Button	1 ½"
Air Control - Lo-Pro	1 5/8"
Air Injector - Button	3/8"
Air Injector - Lo-Pro	¾"
Air Injector - Multi-Body	5/8"
Air Injector - Ozone	5/8"
Air Injector - Top Flow	1 3/16"

VALVES

Valves - Diverter – 1" Mini	2 1/16"
Valves - Diverter – 2" Top Access	3 ¼"
Valves - Spa Drain and Fill	1 5/8"
Valves - Turn On / Off	1 ¼"

LIGHTS

Light - ½"	3/8"
Light - 1"	5/8"
Light - 2 1/8"	1 5/8"
Light – 3"	2 5/8"
Light – 5" Jumbo	3 ¾"
Light – 7" XL Jumbo	5 ¾"
Cup Holder with hole saw size	2 5/8"

SKIMMERS / FILTERS

5 ½" Top Load Filter	4 1/8"
Skim Filter - Dyna-Flo	6 7/8"
Grommet Gasket	7"
Skimmers - Strip	
Flat Gasket	2 3/8"
Grommet Gasket	2 ½"
Filters - Top Load	6 7/8"
Grommet Gasket	7"
Teleweir Skim Filters	6 7/8"

SGMS TOP SIDE CONTROLS

Air Control - 1"	2 7/16"
Valves - 1"	2 17/32"
Valves - 2"	3 ¾"

SGMS PIN LIGHTS

Fiberglass/Acrylic	9.8mm
Polypropylene	9.7mm

THE WEDGE

Suction - 5" Designer Pro	4"
5" Ultra Super Hi-Flo	4"
5" Super Hi-Flo	4"
3 ½" Hi-Flo	3"
Dyna-Flo	7 ½"
Master Massage	6 ½"
Light - 5" Jumbo	4 3/8"
3 ½"	3"

SPECIALTY ITEMS

Aroma Therapy Canister	1 5/8"
Auto Vent	4"
Fittings - Thru Wall	1 5/16"
Return Fitting	2 5/16"
Thermosensor	1"
Thermowell - Mini	1 3/16"
Waterway Cascade	(2) x 7/8"

Technical Information / **Jet Worksheet Fluid Dynamics**

To determine the GPM and PSI needed for jets desired:

1. Write in the number of jets needed and jet type.
2. Write in jet orifice size.
3. Use the Jet Flow Chart & Performance Curve to determine GPM and PSI.

Jet Worksheet

	Number of Jets	Jet Type	Jet Orifice Size	GPM	PSI
Example	10	Poly Storm Jets	5/16"	100 GPM (refer to Jet Flow Chart)	14 PSI

Total Number of Jets	Total Jet Orifices	Total GPM	PSI *(not cumulative)*

Total GPM is water volume needed to make jets work at desired PSI.
This is your TARGET FLOW and TARGET PRESSURE.
Take this number to Hydraulic Worksheet (next page) and use in Line 2.
This is the total GPM needed at a desired PRESSURE.

1. Determine required turnover rate for spa in gallons per minute (GPM).

_____ / _____ = _____
Total Gallons / Desired Turnover Rate (30 min. spa) = GPM

2. Determine GPM and PSI needed for maximum jet performance (use Jet Performance Flow Curves from page 114).

_____ Target Flow (GPM) _____ Target Pressure (PSI)

3. A. Figure resistance head of system:
From Friction Flow Chart on page 254 and Friction Loss in Fittings on page 255, convert fittings and pipe lengths into feet of head.

EXAMPLE:
A. (4) 2" 90° elbows = 4 x 8.6 = 34.4 feet of 2" pipe
B. 50 feet of 2" pipe = 50 feet
A + B: 34.4 feet + 50 feet = 84.4 feet
Looking at the Friction Flow Chart, 2" pipe at 10 feet per second gives us 100 GPM at 14.4 feet of head. This is figured in 100 foot length of pipe. We multiply .844 times 14.4 = 12.15 feet of head. Or to convert to PSI x .433 = 5.26 PSI loss.

A _____ Quantity x _____ Fitting Type (Friction Loss) = _____ Straight Length of Pipe

B _____ Quantity x _____ Pipe = _____ Straight Length of Pipe

_____ A + _____ B = _____ Total Pipe Length

_____ Pipe Length x _____ Head of Loss for 100 ft. Length = _____ Feet of Head

B. Figure Actual Head Loss of Components: (Refer to Head Loss Chart on Page 259)

EXAMPLE:
1) One 1 ½" main drain at 50 GPM has 2 feet of head.
2) One 1 ½" skimmer 50 GPM has 4 feet of head.
Total head loss of components is 6 feet of head.

Quantity	GPM	Head Loss
_____	_____	_____
_____	_____	_____

Total Head Loss of Components: _____

C. Add Head Loss from B and C for Total Resistance Head:

EXAMPLE:
12.15 feet of head (from system resistance) + 6 feet of head (from component head loss) = 18.15 feet of head

_____ Resistance of Head Fittings, etc. + _____ Component Head Loss = _____ TDH

D. Total of B and C is TDH (total dynamic head) of system. Convert total head into PSI by multiplying by .433:

EXAMPLE:
18.15 feet of head x .433 = 7.86 PSI
(This is the amount of pressure lost in the system)

_____ TDH x .433 = _____ PSI

E. Add Target PSI from Jet Worksheet (or Line #2) to Total Pressure Loss (PSI) Line D to find Total Pressure Required and Total Dynamic Head of System:

EXAMPLE:
14 PSI (Required for jets) + 7.86 PSI (Required for system) = 21.86 PSI

_____ Jets PSI Required + _____ System PSI Required = _____ Total PSI Required

F. Match appropriate pump by looking at pump curves.

EXAMPLE:
At 22 PSI (or 50 feet of head) at 100 GPM, you can use The Executive 1 HP Pump or a 2 HP Hi-Flo Side Discharge Pump

.

Friction loss of water in feet of head per 100 foot length of pipe.

U.S. Gal. per Min.	3/4 PIPE			1 PIPE			1¼ PIPE			1½ PIPE			2 PIPE			2½ PIPE			3 PIPE		
	Vel. Ft. per Sec.	Loss in Feet	Loss in PSI	Vel. Ft. per Sec.	Loss in Feet	Loss in PSI	Vel. Ft. per Sec.	Loss in Feet	Loss in PSI	Vel. Ft. per Sec.	Loss in Feet	Loss in PSI	Vel. Ft. per Sec.	Loss in Feet	Loss in PSI	Vel. Ft. per Sec.	Loss in Feet	Loss in PSI	Vel. Ft. per Sec.	Loss in Feet	Loss in PSI
1	.60	.25	.11	.37	.07	.03	.....	.....	.....	.....	.....	.....	.....	.....	.....	.....	.....	.....	.....	.....	.....
2	1.20	.90	.39	.74	.28	.12	.43	.07	.03	.....	.....	.....	.....	.....	.....	.....	.....	.....	.....	.....	.....
3	1.80	1.92	.83	1.11	.60	.26	.64	.16	.07	.47	.07	.03	.....	.....	.....	.....	.....	.....	.....	.....	.....
4	2.41	3.28	1.42	1.48	1.02	.44	.86	.25	.11	.63	.12	.05	.....	.....	.....	.....	.....	.....	.....	.....	.....
5	3.01	5.8	2.51	1.86	1.52	.65	1.07	.39	.17	.79	.18	.08	.....	.....	.....	.....	.....	.....	.....	.....	.....
6	3.61	7.0	3.0	2.33	2.15	.93	1.29	.55	.24	.95	.25	.11	.57	.07	.03	.....	.....	.....	.....	.....	.....
8	4.81	11.8	5.1	2.97	3.6	1.56	1.72	.97	.42	1.25	.46	.2	.76	.14	.06	.54	.05	.02	.....	.....	.....
10	6.02	17.9	7.75	3.71	5.5	2.4	2.15	1.46	.63	1.58	.69	.3	.96	.21	.09	.67	.09	.04	.....	.....	.....
15	9.02	37.8	16.37	5.57	11.7	5.07	3.22	3.07	1.33	2.36	1.45	.63	1.43	.44	.19	1.01	.18	.08	.65	.07	.03
20	.....	.....	.....	7.42	19.9	8.62	4.29	4.2	1.82	3.15	2.47	1.07	1.91	.74	.32	1.34	.30	.13	.87	.12	.05
25	.....	.....	.....	9.28	30.0	13.0	5.36	7.9	3.42	3.94	3.8	1.6	2.39	1.11	.05	1.67	.46	.2	1.08	.16	.07
30	.....	.....	.....	11.14	42.0	18.19	6.43	11.1	4.8	4.73	5.2	2.3	2.87	1.55	.67	2.01	.65	.28	1.30	.23	.1
35	.....	.....	.....	.....	.....	.....	7.51	14.7	6.37	5.52	7.0	3.03	3.35	2.06	.89	2.35	.88	.38	1.52	.30	.13
40	.....	.....	.....	.....	.....	.....	8.58	18.9	8.2	6.30	8.9	3.9	3.82	2.63	1.14	2.64	1.11	.48	1.73	.39	.17
45	.....	.....	.....	.....	.....	.....	9.65	23.5	10.18	7.09	11.1	4.8	4.30	3.28	1.4	3.01	1.39	.6	1.95	.48	.21
50	.....	.....	.....	.....	.....	.....	10.72	28.5	12.3	7.88	13.5	5.8	4.78	4.0	1.7	3.35	1.69	.73	2.17	.58	.25
60	.....	.....	.....	.....	.....	.....	.....	.....	.....	9.46	18.9	8.18	5.74	5.6	2.4	4.02	2.36	1.02	2.60	.81	.35
70	.....	.....	.....	.....	.....	.....	.....	.....	.....	11.03	25.1	10.9	6.69	7.4	3.2	4.69	3.14	1.36	3.04	1.09	.47
80	.....	.....	.....	.....	.....	.....	.....	.....	.....	.....	.....	.....	7.65	9.5	4.1	5.35	4.0	1.73	3.47	1.39	.6
90	.....	.....	.....	.....	.....	.....	.....	.....	.....	.....	.....	.....	8.60	11.8	5.1	6.03	5.0	2.2	3.91	1.73	.75
100	.....	.....	.....	.....	.....	.....	.....	.....	.....	.....	.....	.....	9.56	14.4	6.3	6.70	6.1	2.64	4.34	2.10	1.9
120	.....	.....	.....	.....	.....	.....	.....	.....	.....	.....	.....	.....	11.95	21.8	9.4	8.38	9.2	4.0	5.42	3.19	1.38
150	.....	.....	.....	.....	.....	.....	.....	.....	.....	.....	.....	.....	.....	.....	.....	10.05	12.8	5.5	6.51	4.5	1.95
175	.....	.....	.....	.....	.....	.....	.....	.....	.....	.....	.....	.....	.....	.....	.....	.....	.....	.....	7.59	5.9	2.55
200	.....	.....	.....	.....	.....	.....	.....	.....	.....	.....	.....	.....	.....	.....	.....	.....	.....	.....	8.68	7.9	3.4
225	.....	.....	.....	.....	.....	.....	.....	.....	.....	.....	.....	.....	.....	.....	.....	.....	.....	.....	9.76	9.4	4.07
250	.....	.....	.....	.....	.....	.....	.....	.....	.....	.....	.....	.....	.....	.....	.....	.....	.....	.....	10.85	11.5	4.99
275	.....	.....	.....	.....	.....	.....	.....	.....	.....	.....	.....	.....	.....	.....	.....	.....	.....	.....	.....	.....	.....
300	.....	.....	.....	.....	.....	.....	.....	.....	.....	.....	.....	.....	.....	.....	.....	.....	.....	.....	.....	.....	.....
325	.....	.....	.....	.....	.....	.....	.....	.....	.....	.....	.....	.....	.....	.....	.....	.....	.....	.....	.....	.....	.....

AWG Wire Size												
Amps	14		12		10		8		6		4	
	115 Volts	230 Volts	115 Volts	230 Volts	115 Volts	230 Volts	115 Volts	230 Volts	115 Volts	230 Volts	115 Volts	230 Volts
2	595	1190	946	1891	1479							
3	397	794	630	1261	986							
4	298	595	470	946	740	1479	1161		1808			
5	238	476	378	756	592	1184	926	1858	1447			
6	198	397	315	630	493	986	774	1548	1206	2411	1842	
7	170	340	270	540	423	845	663	1327	1033	2067	1579	
8	149	293	236	473	370	740	581	1161	904	1808	1381	2763
9	132	265	210	420	329	658	516	1032	804	1607	1228	2456
10	119	238	189	376	296	592	464	929	723	1447	1105	2210
12	99	198	158	315	247	493	387	774	603	1206	921	1842
14			135	270	211	423	332	663	517	1033	789	1579
16			118	236	185	370	290	581	452	904	691	1381
18					164	329	258	516	402	804	614	1228
20					148	296	232	464	362	723	553	1105
22					134	269	211	422		658		1005
24					123	247	194	387		603		921
26								357		556		850
28								332		517		789
30								310		482		737
35								265		413		632
40										362		553
45										321		491
50										239		442

Friction Loss in Fittings

SIZE FITTING	½"	¾"	1"	1 ¼"	1 ½"	2"	2 ½"	3"	4"
Gate Valve (Full Open)	0.6	0.7	0.9	1.2	1.3	1.6	1.7	2.0	2.7
Elbow - 90°	3.6	4.5	5.3	6.7	7.5	8.6	9.3	11.1	13.1
Elbow - 45°	0.7	0.9	1.4	1.8	2.2	2.8	3.2	4.1	5.6
Tee (Straight Thru)	1.8	2.5	3.3	4.7	5.7	7.8	9.3	12.1	17.1
Tee (Thru Side)	4.3	5.4	6.7	8.8	10.0	12.1	13.0	17.1	21.2
Swing Check Valve	8.1	8.9	11.2	13.1	15.2	19.1	22.0	27.1	38.2

Head Loss Charts

Component	GPM	Head Loss (ft.)
Main Drain 1 ½" Outlet	20	0.5
Main Drain 1 ½" Outlet	30	1.0
Main Drain 1 ½" Outlet	40	1.5
Main Drain 1 ½" Outlet	50	2.0
Main Drain 1 ½" Outlet	60	2.5
Main Drain 2" Outlet	40	1.0
Main Drain 2" Outlet	50	1.5
Main Drain 2" Outlet	60	2.0
Main Drain 2" Outlet	70	3.0
Main Drain 2" Outlet	80	4.0
Heater	--	7.0 avg.

Component	GPM	Head Loss (ft.)
Skimmer 1 ½" Outlet	20	1.0
Skimmer 1 ½" Outlet	30	2.0
Skimmer 1 ½" Outlet	40	3.0
Skimmer 1 ½" Outlet	50	4.0
Skimmer 1 ½" Outlet	60	5.5
Skimmer 2" Outlet	20	0.5
Skimmer 2" Outlet	30	1.0
Skimmer 2" Outlet	40	2.0
Skimmer 2" Outlet	50	3.0
Skimmer 2" Outlet	60	4.0
Skimmer 2" Outlet	70	5.0
Skimmer 2" Outlet	80	6.0

Cartridge Filters	GPM (.75)	Head Loss (ft.)
25 sq. ft.	18.75	1.1
35 sq. ft.	26.25	2.0
50 sq. ft.	37.50	4.3
70 sq. ft.	52.50	7.5
75 sq. ft.	56.25	8.0
100 sq. ft.	75.00	17.5

Jet Flow Data

Jet orifices sized from ¾" to 1 ½" work better at a lower PSI. Use legend to size properly.

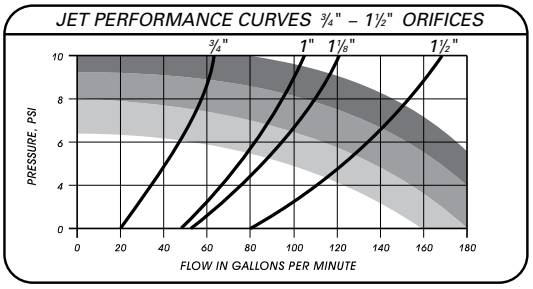

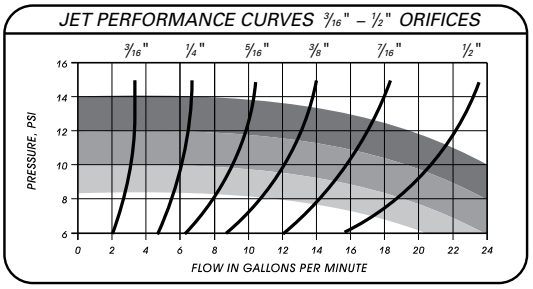

LEGEND:

- WEAK
- MODERATE
- STRONG

JET FLOW CHART

JETS				
NOZZLE ORIFICE SIZE	10 PSI	15 PSI	20 PSI	
3/16	3	4	5	GPM
¼	6	7	8	GPM
5/16	9	10	12	GPM
⅜	13	16	18	GPM
7/16	17	19	22	GPM
½	24	29	33	GPM
¾	63	65	75	GPM
1	95	116	134	GPM
1⅛	120	147	170	GPM
1½	213	260	301	GPM

SWIM SPA CONFIGURATIONS

Note: Dimensions represent sample configuration only. Various custom configurations are possible.

Old Faithful Jets Swim Spa Configuration

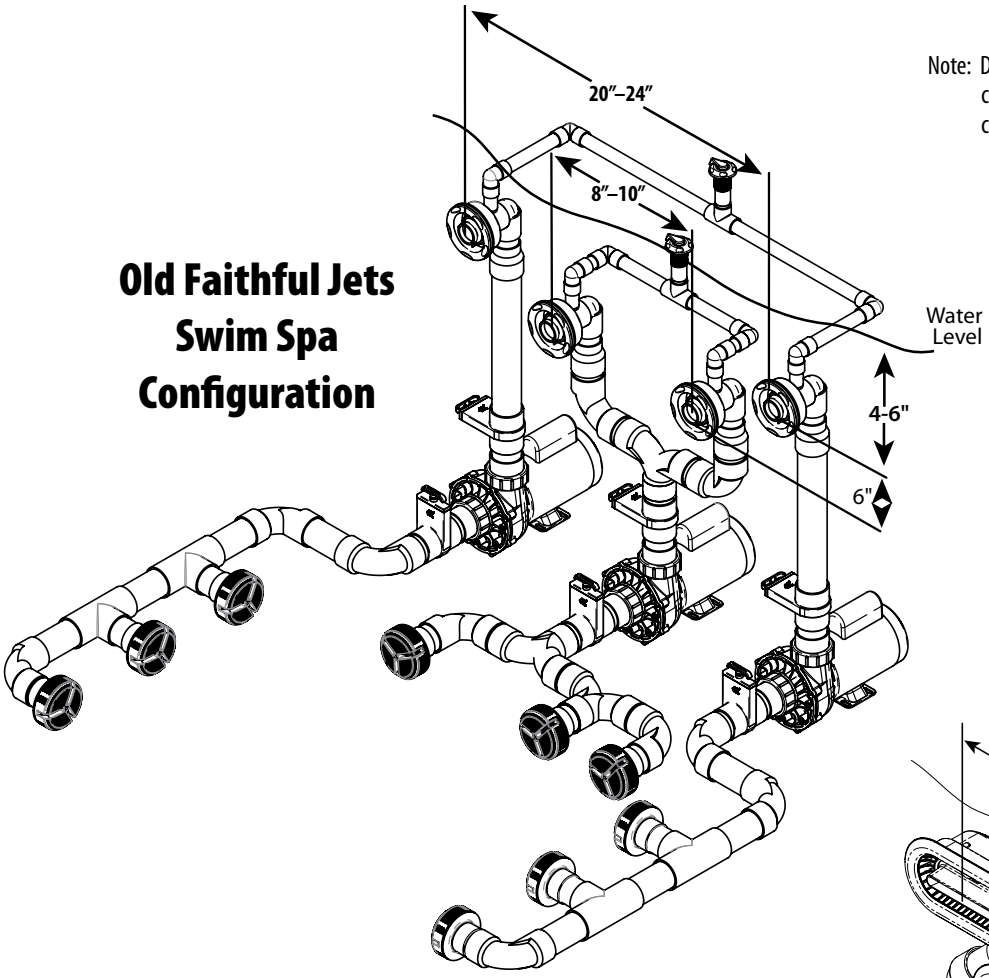

River Jets Swim Spa Configuration

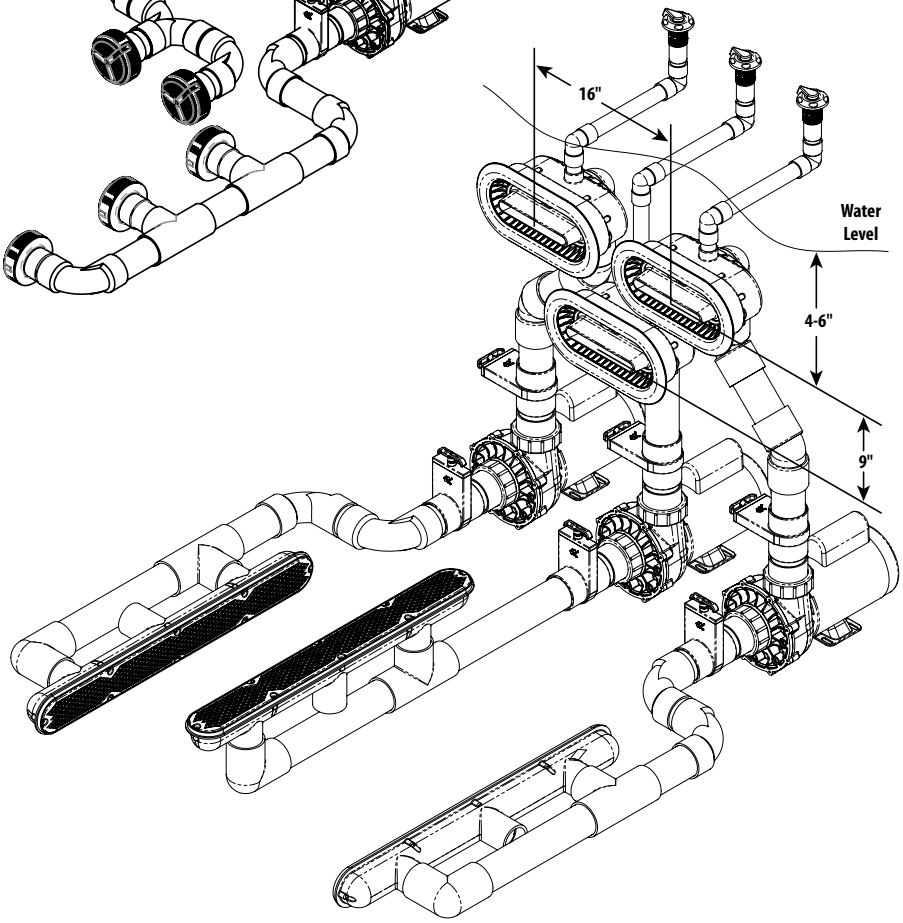

Displays

Part No.	Description
150-0020	Executive 56 Frame Pump Cutaway
150-0010	Vinyl Liner Builder's Pack
150-0031R	Supreme Pump - 90° Right, 3 Ft. Twist Lock Cord
150-0045	150 Sq. Ft. Pro Clean Plus Cartridge Cutaway
150-0050	SVL Cutaway
150-0100	ProClean Plus 100 Display
150-0110	Sweep Ell Display
150-0130	TruSeal & Swing Valve Display
150-0151	Champion Pump Display
150-0157	ClearWater II D.E. 12 Sq. Ft. 44 GPM Filter Cutaway - Gray
150-0160	Champion Pump With Valve - Assembly Cutaway
150-0165	Power Defender 165 (1.65HP) Pump Display
150-ECONOVS	Power Defender 270 (2.7HP) Pump Display
150-0180	River Swim Jet
150-0200	200 Sq. Ft. Pro Clean Cartridge Filter Cutaway
150-0237	Carefree Sand Filter 22" Cutaway
150-2047	ClearWater Sand Filter 19" Cutaway - Gray
150-0277	Carefree Sand Filter 26" Cutaway
150-0280R	Hi-Flo II 90° Right – 3 Ft. NEMA Display
150-0290	SMF Pump Display
150-0320	Poly Storm Gunite Jet Display with Tee Body Thread-in
150-0330	Power Storm Gunite Jet Display with Tee Body Thread-in
150-0340	Mini Storm Gunite Jet Display with Tee Body Thread-in
150-0360	Gunite Storm Jet Internal Display - Power, Poly & Mini Thread-in
150-0420	Carefree Oval Sand Filter 19" Cutaway w/Dummy Motor
150-0437	Carefree Oval Sand Filter 22" Cutaway, 1.5 HP, 3 Ft. Twist Lock Cord
150-0460	Carefree Oval Sand Filter 22" Cutaway, Sub Assembly
150-0730	Flex PVC Sample Kit
150-1000	Santanna II Blower Display
150-1010	Santanna II Blower - Working Display
150-1507	ClearWater 150 Sq. Ft. Cartridge Filter Cutaway - Gray
150-1527	ClearWater 150 Sq. Ft. Cartridge Filter, Supreme Motor, 3 Ft. NEMA Cord
150-1537	Clearwater 150 Sq. Ft. Cartridge Filter, Supreme Motor, 3 Ft. Twist Lock Cord
150-1547	Clearwater 150 Sq. Ft. Cartridge Filter, Hi-Flo Motor, 3 Ft. NEMA Cord
150-1600	VGB Drains Display Board - 6" / 8" / 10" / 9" x 9" / 12" x 12" / 18" x 18"
150-1610	VGB Drains Display Board - 32" Strip / 24" x 24"
150-1770	Spa Suction Display I
150-1780	Spa Suction Display II
150-2017	36 Sq. Ft. D.E. Crystal Water Cutaway Filter - Gray
150-2027	60 Sq. Ft. D.E. Crystal Water Cutaway Filter - Gray
150-2037	325 Sq. Ft. Cartridge Crystal Water Cutaway - Gray
150-2047	525 Sq. Ft. Cartridge Crystal Water Cutaway - Gray
150-2057	425 Sq. Ft. Cartridge Crystal Water Cutaway - Gray
150-2067	48 Sq. Ft. D.E. Crystal Water Cutaway Filter
150-3410G	Gunite Jet, 3 Jet Manifold Straight Body Display
150-3600	Gunite Poly Jet Display Threaded Bodies Only (8)
150-4000	Pipe Extender / Insider Coupler Display
150-8090	Hi-Flo II Pump Display
150-8150	Smart Filtration 10VS 24 - 11 x 17
150-8160	Smart Filtration OP Cost 11 x 17
150-8170	Skimmer Display Stand
150-C012-W	Chlorinator In-Line Display - White
150-8700	Booster Pump Display

Brochures/Flyers (continued next column)

Part No.	Description
150-8010	SVL56 Pump
150-8010-F	SVL56 Pump - Spanish
150-8010-S	SVL56 Pump - Spanish
150-8050	ClearWater II Chlorinator
150-8050-S	ClearWater II Chlorinator - Spanish
150-8050-F	ClearWater II Chlorinator - French

Brochures/Flyers (continued)

Part No.	Description
150-8070	Hi-Flo II Pump
150-8120	ClearWater II Cartridge Deluxe Systems
150-8130	ClearWater Sand Deluxe Systems
807-0024	Crystal Water D.E. Filter
807-0024S	Crystal Water D.E. Filter - Spanish
807-0025	Crystal Water Cartridge Filter
807-0025-F	Crystal Water Cartridge Filter - French
807-0025-S	Crystal Water Cartridge Filter - Spanish
807-0028	Carefree Sand Filter
807-0028-S	Carefree Sand Filter - Spanish
807-0036	Renegade Venturi Gunite Skimmer
807-0042	Champion Pump
807-0042F	Champion Pump - French
807-0042S	Champion Pump - Spanish
807-0044	ProClean Plus Cartridge Filter
807-0044-F	ProClean Plus Cartridge Filter - French
807-0044-S	ProClean Plus Cartridge Filter - Spanish
807-0055	TWM Sand Systems
807-0056	ClearWater II D.E. Systems (Standard & Deluxe)
807-0057	TWM Cartridge Filter Systems
807-0059	Viper Pump
807-0059-F	Viper Pump - French
807-0062-SPA	ShurFlex Pool & Spa Hose - Spa Specifications
807-0062-POOL	ShurFlex Pool & Spa Hose - Pool Specifications
807-0068	EX2 Pump
807-0075	ClearWater Sand Standard Systems
807-0078	Renegade Gunite Skimmer
807-0089	Carefree Sand Filter Standard & Deluxe Systems
807-0095	ClearWater II Cartridge Standard Systems
807-0097	VGB Drains & Suctions
807-0100	SMF Pump
807-0100-FR	SMF Pump - French
807-0100-S	SMF Pump - Spanish
807-0107	TWM-30 Series Cartridge & Sand Systems
807-0116A	Crystal Water Hang Tag Assembly (with tie)
807-0120	Pool Products Worksheet 2017
807-0125	Storm Jets - Orion/Eclipse/Reverse Eclipse
807-0128	Power Defender SVL Variable Speed (300)
807-0183	Power Defender Variable Speed Booster Pump
807-0184	Power Defender Exec VS & EX2 VS Spa Pumps
807-0186	Power Defender High Performance EX2 Spa Pump
807-0187	Power Defender_2 Pole_6 Pole Spa Pumps
807-0188	Power Defender Viper VS Spa Pump
807-0352	Spa Steps
807-0352-F	Spa Steps - French
807-0354	Pump Cross-Reference w/Adjustable Base
807-1021	Power Defender 165 / 270 / 300 VS Pool Pumps
807-1021-F	Power Defender 165 / 270 / 300 VS Pool Pumps - French
807-1022	MIniStorm, PolyStorm & PowerStorm Thread-in Gunite Jets
807-1111	TruSeal Check & Diverter Valves
807-2010	Booster Pump
807-2030	NEO 2100 Spa Control
807-2030-F	NEO 2100 Spa Control - French
807-2031	NEO 1500 Spa Control
807-2031-F	NEO 1500 Spa Control - French
807-2032	NEO 1200 Spa Control
807-2032-F	NEO 1200 Spa Control - French
807-2033	OASIS Pool Pool & Spa Control
807-2035	NEO 2100_1500_1200_Configurations
807-8410	Santanna II - Stealth II Blowers

Fax Cover

To: **Waterway Customer Service**
Toll Free Fax: **888.772.5387 (888.SPA JETS)**

From:

Name:_____

Company:_____

Address:_____

City:_____State:_____Zip:_____

Phone:_____Fax:_____

❑ **Builder** ❑ **Mfr./OEM** ❑ **Sub Assembly** ❑ **Dealer** ❑ **Service Firm**

❑ **Swimming Pool** ❑ **Distributor** ❑ **Spa** ❑ **Whirlpool Bath**

Quantity	Part No.	Description	Price Each	Price Total

Replacement Parts

2019

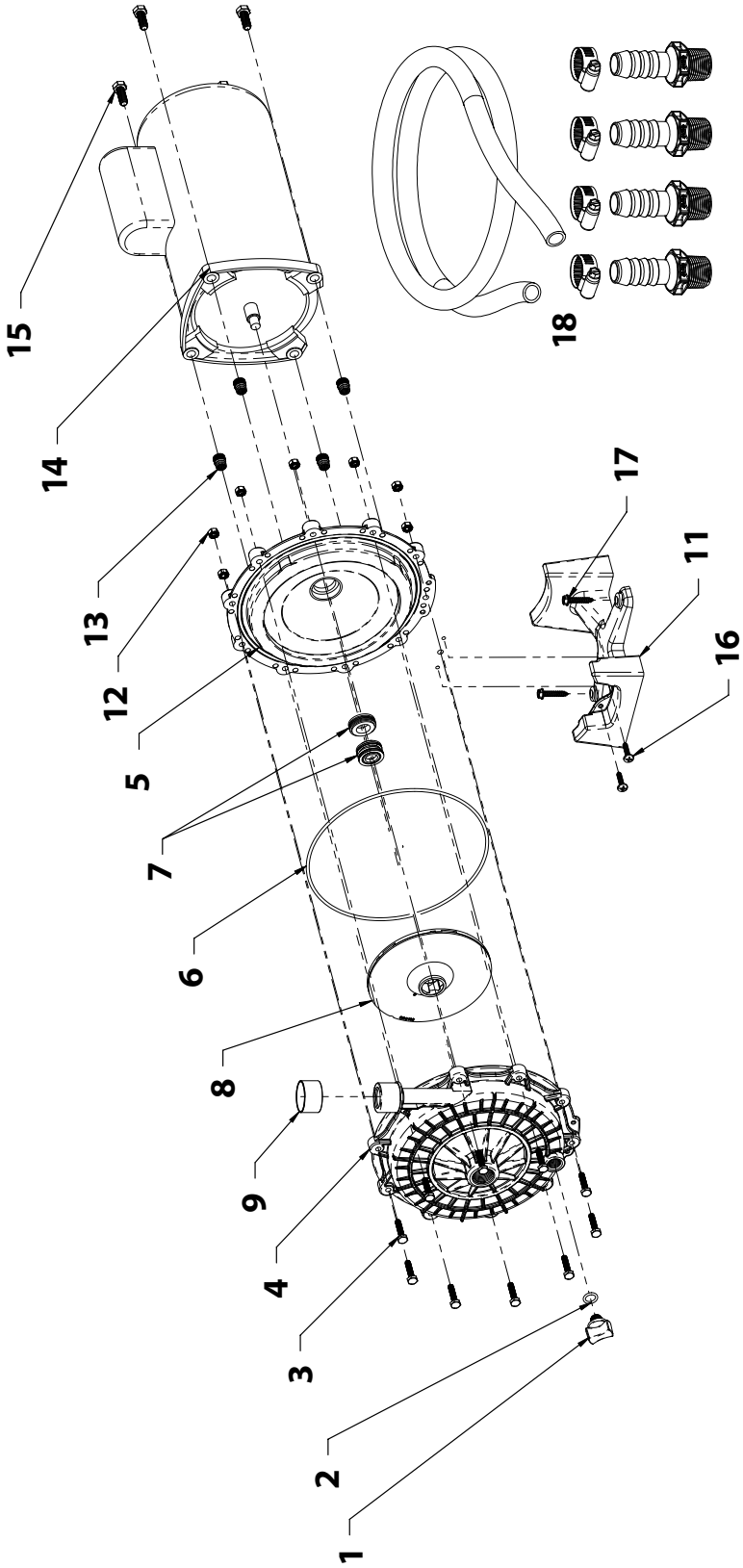
15
14
13
12
5
7
6
8
9
4
3
2
1
18
17
11
16

Booster Pump Replacement Parts

Item	Part No.	Description	List (US $)
1	**715-8400B**	Drain Plug ⅜" Booster Pump	8.80
2	**805-0112B**	O-Ring, #2-112, .487 I.D. X .103 W	1.41
3	**819-2590B**	Bolt, Hex Hd, 1/4"-20 UNC X 1-⅛"LG SS (19)	2.19
4	**315-8300B**	Volute Booster Pump	132.67
5	**311-8300B**	Seal Plate Booster Pump	**
6	**805-0268B**	O Ring #268 (2)	7.66
7	**319-3290B**	Pump Seal Set (811-4020A, 811-4020B)	28.03
8	**310-8400B**	¾ HP Impeller Booster Pump Brass Impeller Insert, ½"-20 UNC-2B X 1"	73.59
9	**872-6200B**	Sleeve 1 ½" X .049 Wall SS304	9.77
11	**672-1380B**	Motor Mount, Booster Pump	**
12	**820-0013B**	Hex Nut, Serated 1/4-20-Sand Filter (19)	**
13	**820-0019B**	Brass Insert, ⅜"-16 UNC-2B X ⅝" (.625) Volute (4)	2.45
14	**SG3P10430-1**	Booster Pump Motor	**
15	**819-0011B**	Screw, ⅜"-16 X 1 Hex Cap Head, Pool Pump (4)	5.98
16	**819-0800B**	Screw, #12 X 1.00" Lg, Type AB, Self-tapping, Pnhd, Phil. (2)	0.96
17	**819-0013B**	Screw Slot Hex Washer ¼" X 1_¼" (2)	1.57
18	**550-8700B**	Hose, Fitting And Clamp Kit (4)	**

** Please request price quote.

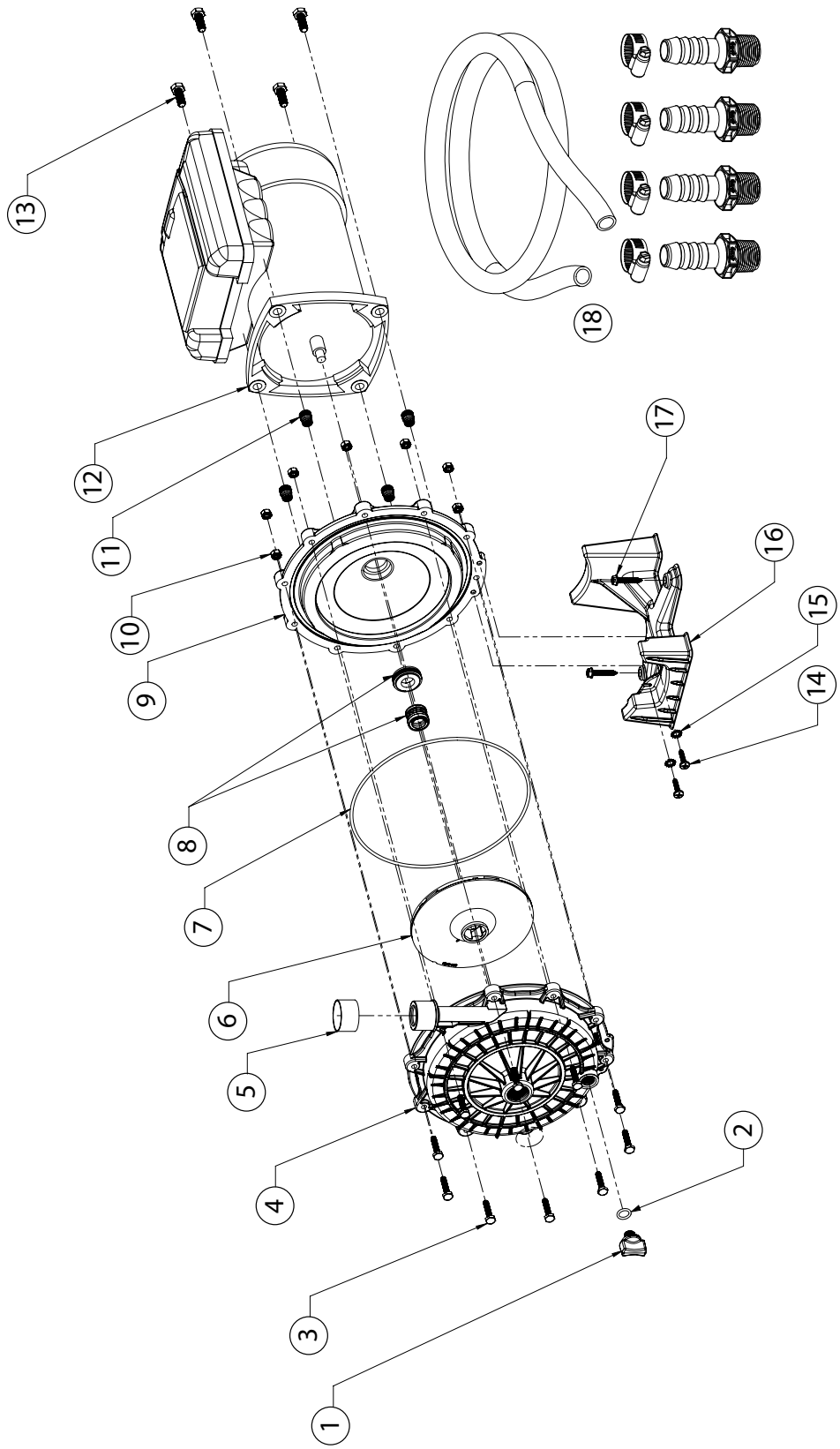
1
2
3
4
5
6
7
8
9
10
11
12
13
14
15
16
17
18

Power Defender Booster Pump 275 and 175 Replacement Parts

Item	Part No.	Description	List (US $)
1	**715-8400B**	Drain Plug ⅜" Booster Pump	8.80
2	**805-0112B**	O-Ring, #2-112, .487 I.D. x .103 W	1.41
3	**819-2590B**	Bolt, Hex Hd, ¼"-20 UNC x 1-⅛"LG SS (19)	2.19
4	**315-8300B**	Volute Booster Pump	132.67
5	**872-6200B**	Sleeve 1 ½" x .049 Wall SS304	9.77
6	**310-8400B**	¾ HP Impeller Booster Pump Brass Impeller Insert, ½"-20 UNC-2B X 1"	73.59
7	**805-0268B**	O Ring #268 (2)	7.66
8	**319-3290B**	Pump Seal Set (811-4020A, 811-4020B)	28.03
9	**311-8300B**	Seal Plate Booster Pump	**
10	**820-0013B**	Hex Nut, Serated ¼-20-Sand Filter (19)	**
11	**820-0019B**	Brass Insert, ⅜"-16 UNC-2B x ⅝" (.625) Volute (4)	2.45
12	**–**	Motor	**
13	**819-0035B**	Screw, ⅜"-16 x 1 Hex Cap Head, Pool Pump (4)	5.98
14	**819-8400B**	Screw, #12 X 1.00" Lg, Type AB, Self-tapping, Pnhd, Phil. (2)	0.96
15	**820-8410B**	Ext. Tooth Lock Washer ½" OD x ¼" ID	**
16	**672-1380B**	Motor Mount, Booster Pump	**
17	**819-0013B**	Screw Slot Hex Washer ¼" x 1 ¼" (2)	1.57
18	**550-8700B**	Hose, Fitting And Clamp Kit (4)	**

** Please request price quote.

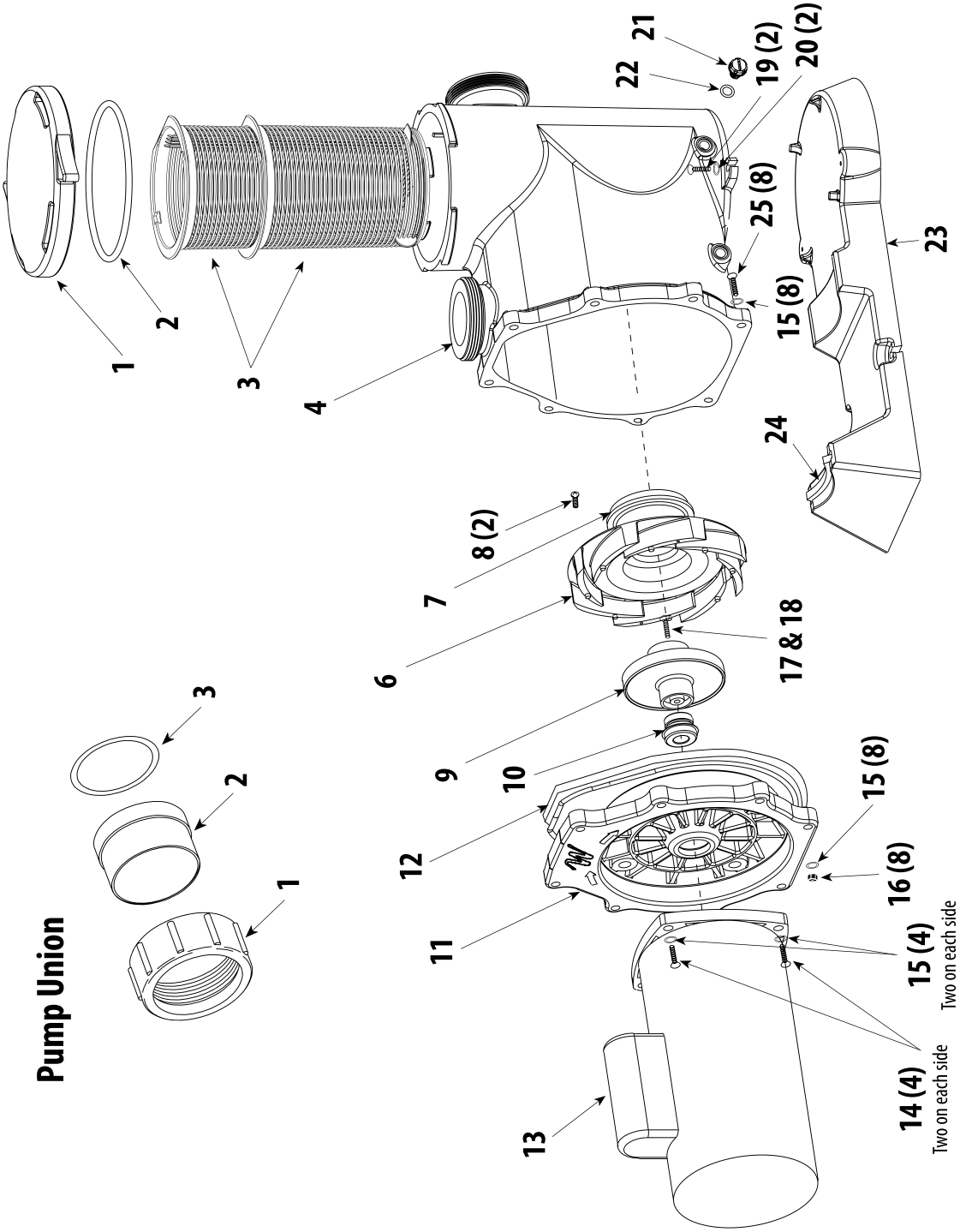
1
2
3
4
21
22
19 (2)
20 (2)
25 (8)
15 (8)
23
24
8 (2)
7
6
17 & 18
9
10
12
11
13
15 (8)
16 (8)
15 (4)
Two on each side
14 (4)
Two on each side
Pump Union
3
2
1

SVL56 High-Flow Pump Replacement Parts

Item	Part No.	Description	List (US $)
1	**511-1310B**	Trap Lid	63.88
2	**805-0439B**	Trap Lid O-Ring	7.85
3	**319-1310B**	Basket Assembly	26.78
4	**315-1300B**	Volute Housing	318.85
6	**310-3300B**	Diffuser - High-Flow	81.92
7	**805-0238B**	Diffuser O-Ring	4.52
8	**819-0018B**	Diffuser Screw (2 required)	3.16
9	**310-3650B**	SVL56E-110, SVL56S-107, SVL56S-110, SVL56S-210 Impeller Assembly - High-Flow	67.36
	310-3660B	SVL56E-115, SVL56S-115, SVL56S-215 Impeller Assembly - High-Flow	67.36
	310-3670B	SVL56E-120, SVL56S-120, SVL56S-125 Impeller Assembly - High-Flow	69.25
	310-3680B	SVL56E-130 Impeller Assembly - High-Flow	66.79
10	**319-3100B**	Pump Seal Set - Viton (replaces 319-3110B)	25.34
11	**311-1400B**	Volute Faceplate	103.88
12	**711-4290B**	Faceplate Gasket	22.26
13	**–**	Motor	**
14	**819-0011B**	Screw - 3/8" - 16 x 1/8" (4 required)	5.98
15	**820-0017B**	3/8" Flat Washer (12 required)	1.06
16	**820-0016B**	3/8" 16-Fin Serrated Hex Nut	4.21
17	**819-4360B**	Screw Head Left Hand Thread	4.94
18	**711-4300B**	SVL Gasket for Left Hand Screw	10.32
19	**819-0013B**	Screw (2 required)	1.57
20	**820-0018B**	Flat Washer (2 required)	0.49
21	**715-1201B**	3/8" Quarter Slot Drain Plug	3.50
22	**805-0112B**	Drain Plug O-Ring	1.41
23	**672-1300B**	SVL56 Base	74.50
24	**672-1310B**	Motor Support Strip	13.38
25	**819-0016B**	Screw (8 required)	2.91

Pump Union Replacement Parts

Item	Part No.	Description	List (US $)
1	**415-6001B**	2 ½" Union Nut - Black	7.70
2	**417-5971B**	2" Tailpiece for 2 ½" Union Nut - O-Ring Black	4.68
2	**417-6001B**	2 ½" S Tailpiece - Black	5.62
3	**711-6020B**	Gasket 2½" Union Heater	1.41

** Please request price quote.

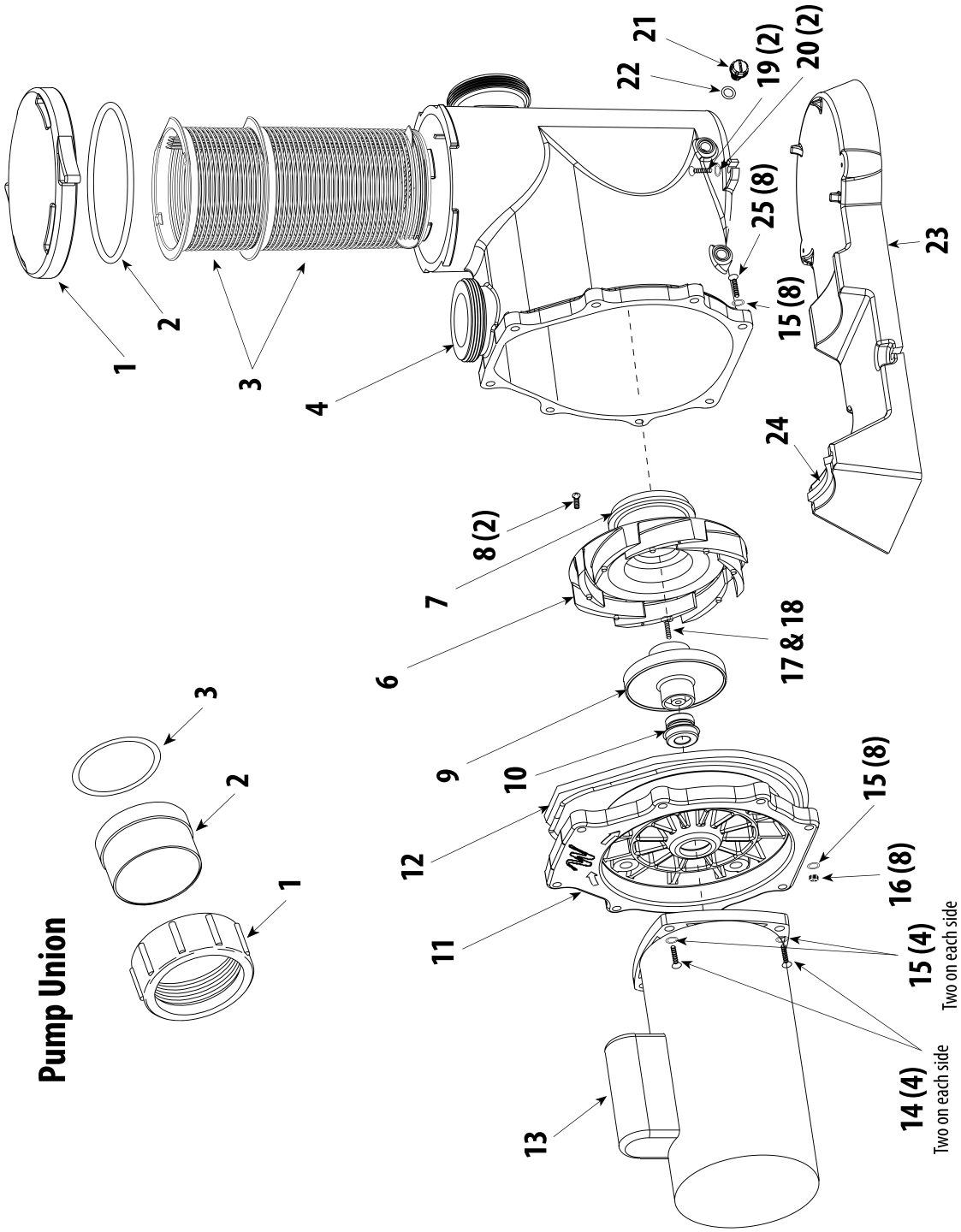
1
2
3
4
21
22
19 (2)
20 (2)
25 (8)
15 (8)
23
24
8 (2)
7
6
17 & 18
9
10
12
11
13
15 (8)
16 (8)
15 (4)
Two on each side
14 (4)
Two on each side
Pump Union
3
2
1

Power Defender SVL300 Pump Replacement Parts

Item	Part No.	Description	List (US $)
1	**511-1310B**	Trap Lid	63.88
2	**805-0439B**	Trap Lid O-Ring	7.85
3	**319-1310B**	Basket Assembly	26.78
4	**315-1300B**	Volute Housing	318.85
6	**310-3300B**	Diffuser - High-Flow	81.92
7	**805-0238B**	Diffuser O-Ring	4.52
8	**819-0018B**	Diffuser Screw (2 required)	3.16
9	**310-3650B**	SVL56E-110, SVL56S-107, SVL56S-110, SVL56S-210 Impeller Assembly - High-Flow	67.36
	310-3660B	SVL56E-115, SVL56S-115, SVL56S-215 Impeller Assembly - High-Flow	67.36
	310-3670B	SVL56E-120, SVL56S-120, SVL56S-125 Impeller Assembly - High-Flow	69.25
	310-3680B	SVL56E-130 Impeller Assembly - High-Flow	66.79
10	**319-3100B**	Pump Seal Set - Viton (replaces 319-3110B)	25.34
11	**311-1400B**	Volute Faceplate	103.88
12	**711-4290B**	Faceplate Gasket	22.26
13	**–**	Motor	**
14	**819-0011B**	Screw - 3/8" - 16 x 1/8" (4 required)	5.98
15	**820-0017B**	3/8" Flat Washer (12 required)	1.06
16	**820-0016B**	3/8" 16-Fin Serrated Hex Nut	4.21
17	**819-4360B**	Screw Head Left Hand Thread	4.94
18	**711-4300B**	SVL Gasket for Left Hand Screw	10.32
19	**819-0013B**	Screw (2 required)	1.57
20	**820-0018B**	Flat Washer (2 required)	0.49
21	**715-1201B**	3/8" Quarter Slot Drain Plug	3.50
22	**805-0112B**	Drain Plug O-Ring	1.41
23	**672-1300B**	SVL56 Base	74.50
24	**672-1310B**	Motor Support Strip	13.38
25	**819-0016B**	Screw (8 required)	2.91

Pump Union Replacement Parts

Item	Part No.	Description	List (US $)
1	**415-6001B**	2 ½" Union Nut - Black	7.70
2	**417-5971B**	2" Tailpiece for 2 ½" Union Nut - O-Ring Black	4.68
2	**417-6001B**	2 ½" S Tailpiece - Black	5.62
3	**711-6020B**	Gasket , 2½" Union Heater	1.41

** Please request price quote.

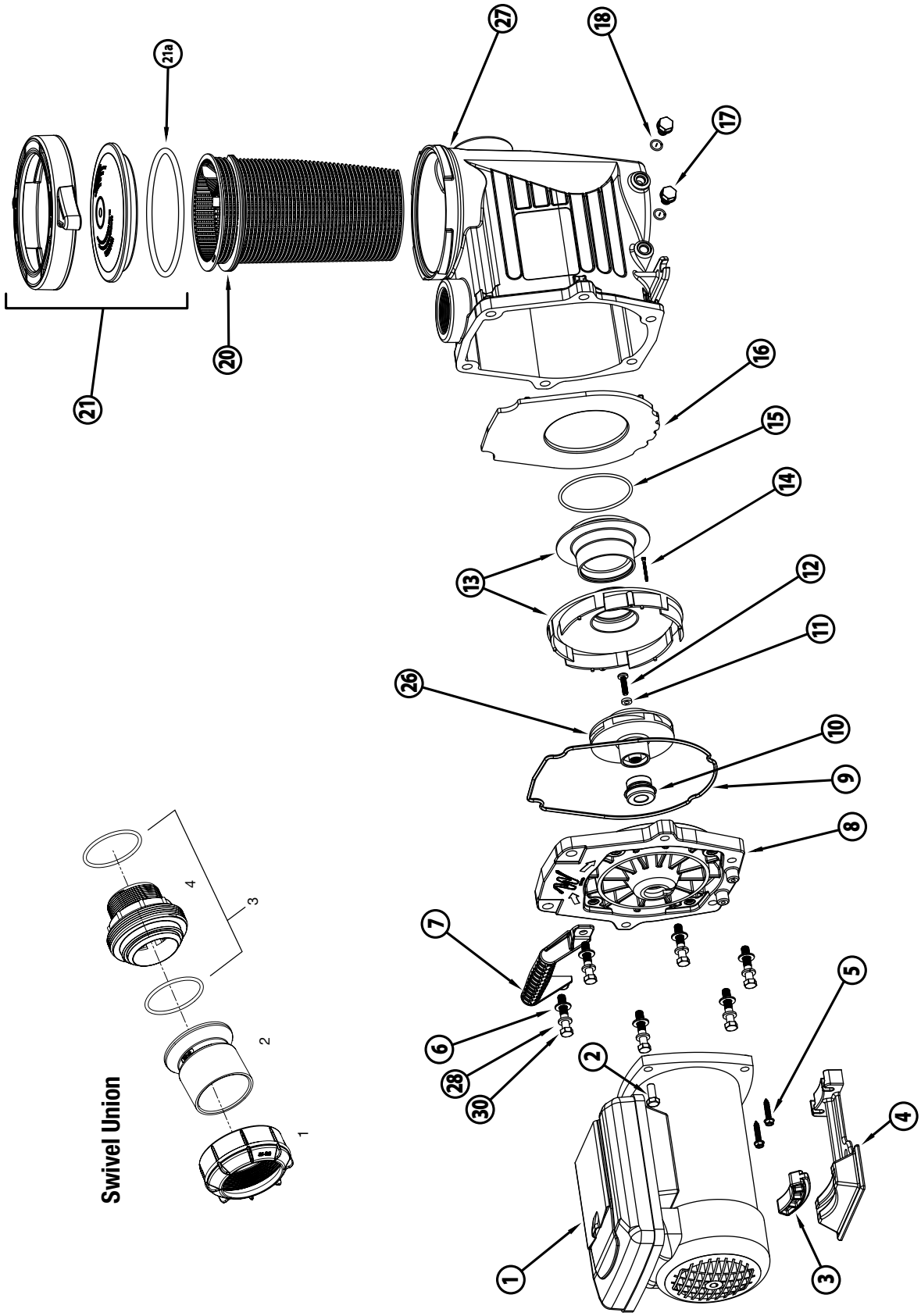
Swivel Union
1
2
3
4
1
2
3
4
5
6
7
8
9
10
11
12
13
14
15
16
17
18
20
21
21a
26
27
28
30

Power Defender 1.65HP Variable Speed Pump Replacement Parts

Item	Part No.	Description	List (US $)
1	**350V120-1**	Motor, 56 Frame Variable Spd 230V	**
2	**819-0035B**	Bolt .375-16 x .875 Long	5.12
3	**672-1350B**	Motor Support Supra Max	27.84
4	**319-1500B**	Motor Base	60.32
5	**819-0013B**	Screw Slot Hex Washer ¼" x 1 ¼"	1.57
6	**820-0017B**	⅜" Flat Washer Type B, Pool Pumps	1.06
7	**319-1700B**	Handle	41.73
8	**311-1450B**	Face Plate	100.20
9	**806-1400B**	Gasket, Face Plate	7.62
10	**319-3100B**	Pump Seal Set-Viton	25.34
11	**711-4300B**	Washer, Impeller	10.32
12	**819-4360B**	Screw Phil. Pan Head Left Hand ¼-20 x 1"	4.94
13	**310-7470B**	Diffuser Assy	81.92
14	**819-0018B**	#4-40 Uncs Bolt Schs	3.16
15	**805-0238B**	O-Ring-238	4.52
16	**319-1420B**	Diffuser Plate	55.19
17	**715-1201B**	⅜" Quarter Slot Plug (Sd Wet End)	3.50
18	**805-0014B**	O-Ring, -014	1.40
20	**319-1430B**	Basket Assy	17.52
21	**319-4100B**	Lid & Nut & O-ring - 6" Trap	45.10
21a	**805-0436B**	O-Ring - 6" Trap Lid	4.48
26	**310-7430B**	2 HP Full 2.5 HP Upr Impeller Assy	67.36
27	**319-1630B**	Pump Housing - 2" x 2" Npt	**
28	**820-0017-1B**	⅜" Washer, Split Lock	3.40
30	**819-0016B**	⅜"-16 x 2" Lg Hex Head	2.91

Swivel Union Replacement Parts

Item	Part No.	Description	List (US $)
1	**415-4061B**	2" Self Aligning Union Nut	9.08
2	**417-2111B**	Tailpiece 2" S. Self-Aligning Union - Black	9.26
3	**805-0332B**	O-ring #332 Self Aligning Union	1.74
4	**417-2121-CPVCB**	Tailpiece 2" MPT, Self-Aligning Union	9.08

** Please request price quote.

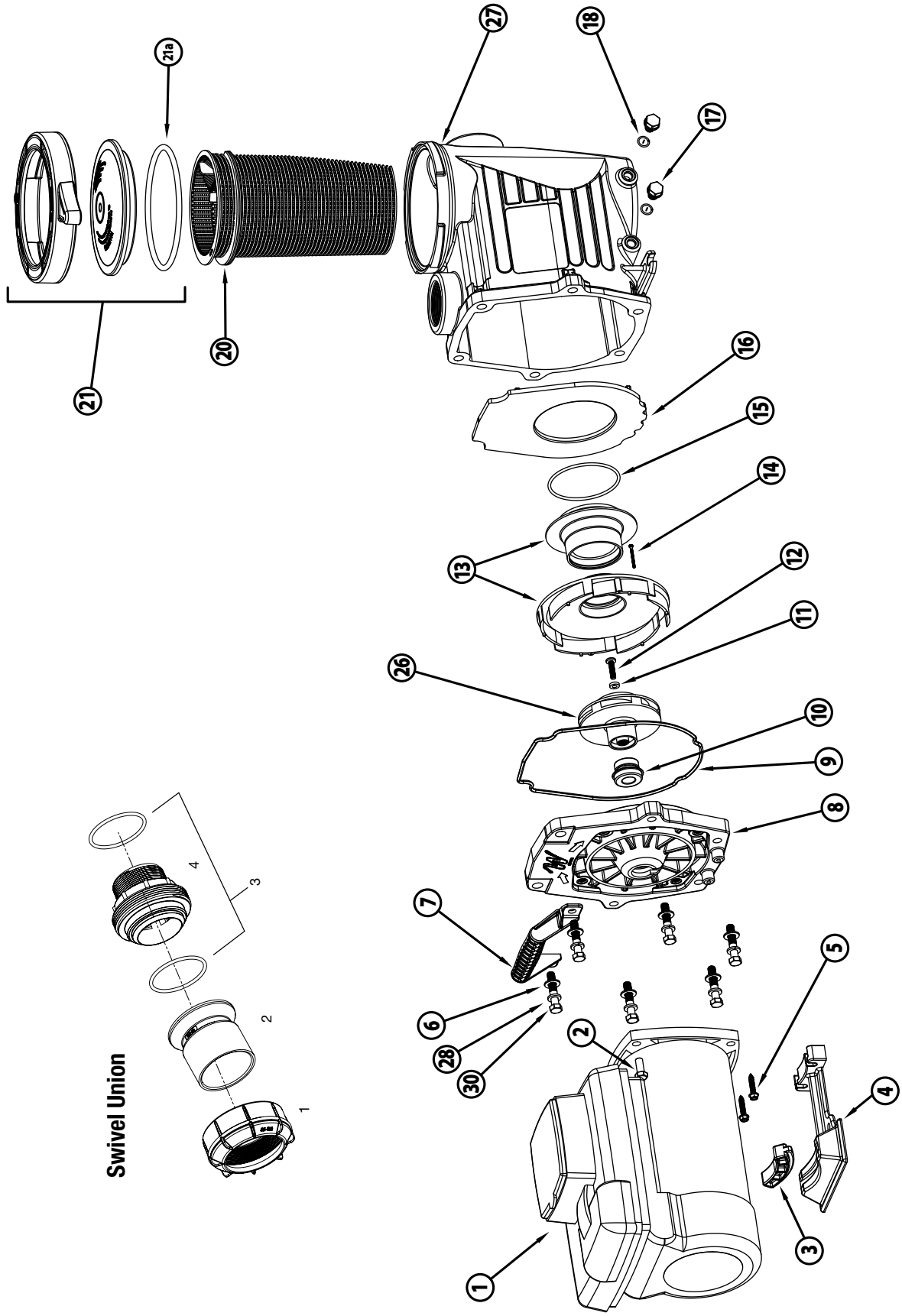
Swivel Union
1
2
3
4
1
2
3
4
5
6
7
8
9
10
11
12
13
14
15
16
17
18
20
21
21a
26
27
28
30

Power Defender 2.7HP Variable Speed Pump Replacement Parts

Item	Part No.	Description	List (US $)
1	**350VS20-1**	Motor, 56 Frame Variable Spd 230V	**
2	**819-0035B**	Bolt .375-16 x .875 Long	5.12
3	**672-1350B**	Motor Support	27.84
4	**319-1500B**	Motor Base	60.32
5	**819-0013B**	Screw Slot Hex Washer ¼" x 1 ¼"	1.57
6	**820-0017B**	⅜" Flat Washer Type B, Pool Pumps	1.06
7	**319-1700B**	Handle	41.73
8	**311-1450B**	Face Plate	100.20
9	**806-1400B**	Gasket, Face Plate	7.62
10	**319-3100B**	Pump Seal Set-Viton	25.34
11	**711-4300B**	Washer, Impeller	10.32
12	**819-4360B**	Screw Phil. Pan Head Left Hand ¼-20 x 1"	4.94
13	**310-7470B**	Diffuser Assy	81.92
14	**819-0018B**	#4-40 Uncs Bolt Schs	3.16
15	**805-0238B**	O-Ring-238	4.52
16	**319-1420B**	Diffuser Plate	55.19
17	**715-1201B**	⅜" Quarter Slot Plug (Sd Wet End)	3.50
18	**805-0014B**	O-Ring, -014	1.40
20	**319-1430B**	Basket Assy	17.52
21	**319-4100B**	Lid & Nut & O-ring - 6" Trap	45.10
21a	**805-0436B**	O-Ring - 6" Trap Lid	4.48
26	**310-7430B**	2 HP Full 2.5 HP Upr Impeller Assy	67.36
27	**319-1630**	Pump Housing - 2" x 2" Npt	**
28	**820-0017-1B**	⅜" Washer, Split Lock	3.40
30	**819-0016B**	⅜"-16 x 2" Lg Hex Head	2.91

Swivel Union Replacement Parts

Item	Part No.	Description	List (US $)
1	**415-4061B**	2" Self Aligning Union Nut	9.08
2	**417-2111B**	Tailpiece 2" S. Self-Aligning Union - Black	9.26
3	**805-0332B**	O-ring #332 Self Aligning Union	1.74
4	**417-2121-CPVCB**	Tailpiece 2" MPT, Self-Aligning Union	9.08

** Please request price quote.

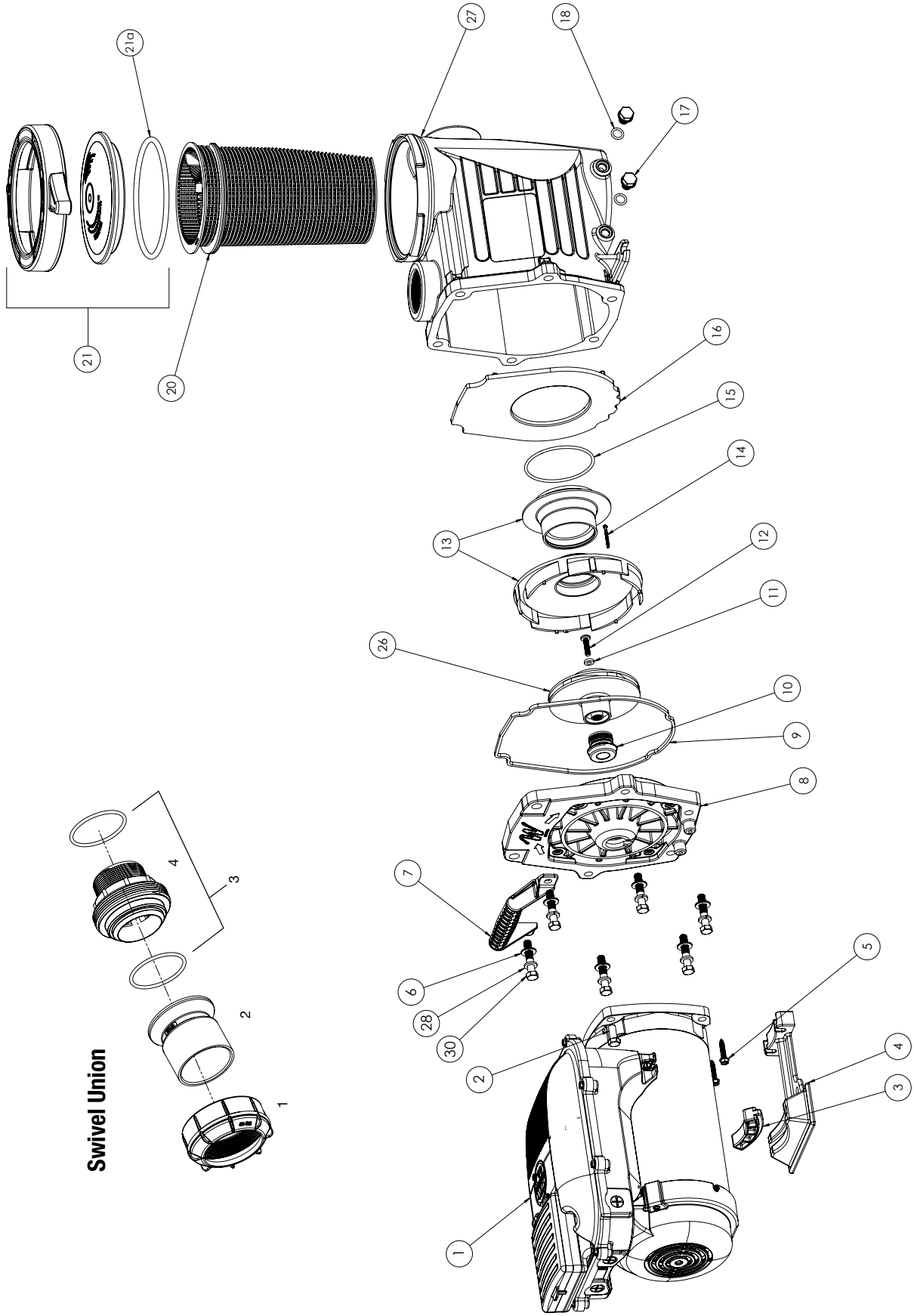
Swivel Union
1
2
3
4
1
2
3
4
5
6
7
8
9
10
11
12
13
14
15
16
17
18
20
21
21a
26
27
28
30

Power Defender 300 Variable Speed Pump Replacement Parts

Item	Part No.	Description	List (US $)
1	–	Motor	**
2	**819-0035B**	Bolt .375-16 x .875 Long	5.12
3	**672-1350B**	Motor Support	27.84
4	**319-1500B**	Motor Base	60.32
5	**819-0013B**	Screw Slot Hex Washer ¼" x 1 ¼"	1.57
6	**820-0017B**	⅜" Flat Washer Type B, Pool Pumps	1.06
7	**319-1700B**	Handle	41.73
8	**311-1450B**	Face Plate	100.20
9	**806-1400B**	Gasket, Face Plate	7.62
10	**319-3100B**	Pump Seal Set-Viton	25.34
11	**711-4300B**	Washer, Impeller	10.32
12	**819-4360B**	Screw Phil. Pan Head Left Hand ¼-20 x 1"	4.94
13	**310-7470B**	Diffuser Assy	81.92
14	**819-0018B**	#4-40 Uncs Bolt Schs	3.16
15	**805-0238B**	O-Ring-238	4.52
16	**319-1420B**	Diffuser Plate	55.19
17	**715-1201B**	⅜" Quarter Slot Plug (Sd Wet End)	3.50
18	**805-0014B**	O-Ring, -014	1.40
20	**319-1430B**	Basket Assy	17.52
21	**319-4100B**	Lid & Nut & O-ring - 6" Trap	45.10
21a	**805-0436B**	O-Ring - 6" Trap Lid	4.48
26	**310-7450B**	Champion 3 HP Impeller Assy	67.36
27	**319-1630B**	Pump Housing - 2" x 2" Npt	**
28	**820-0017-1B**	⅜" Washer, Split Lock	3.40
30	**819-0016B**	⅜"-16 x 2" Lg Hex Head	2.91

Swivel Union Replacement Parts

Item	Part No.	Description	List (US $)
1	**415-4061B**	2" Self Aligning Union Nut	9.08
2	**417-2111B**	Tailpiece 2" S. Self-Aligning Union - Black	9.26
3	**805-0332B**	O-ring #332 Self Aligning Union	1.74
4	**417-2121-CPVCB**	Tailpiece 2" MPT, Self-Aligning Union	9.08

** Please request price quote.

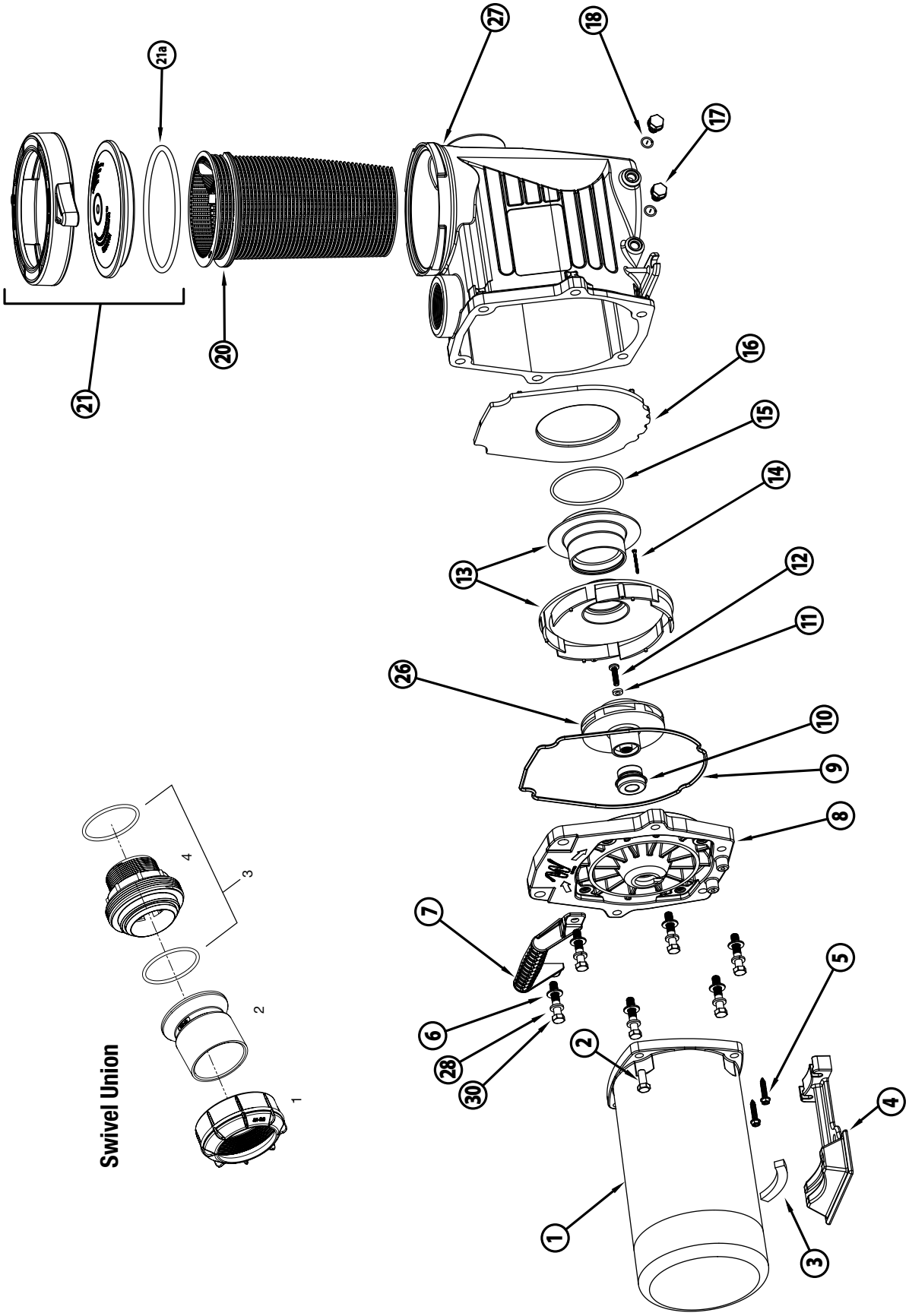
Swivel Union
1
2
3
4
1
2
3
4
5
6
7
8
9
10
11
12
13
14
15
16
17
18
20
21
21a
26
27
28
30

SMF Pump Replacement Parts

Item	Part No.	Description	List (US $)
1	**3310330-1**	Motor, 48-FRAME SQ FLG 3/4HP 115/230V 60HZ	**
2	**819-0035B**	Bolt .375-16 x .875 Long	5.12
3	**672-1350B**	Neoprene Motor Support Strip	27.84
4	**319-1500B**	Motor Support Base	60.32
5	**819-0013B**	Screw Slot Hex Washer ¼" x 1 ¼"	1.57
6	**820-0017B**	⅜" Flat Washer Type B, Pool Pumps	1.06
7	**319-1700B**	Handle	41.73
8	**311-1450B**	Face Plate	100.20
9	**806-1400B**	Gasket, Face Plate	7.62
10	**319-3100B**	Pump Seal Set-Viton	25.34
11	**711-4300B**	Washer, Impeller	10.32
12	**819-4360B**	Screw Phil. Pan Head Left Hand ¼-20 x 1"	4.94
13	**310-7470B**	Diffuser Assy	81.92
14	**819-0018B**	#4-40 Uncs Bolt Schs	3.16
15	**805-0238B**	O-Ring-238	4.52
16	**319-1420B**	Diffuser Plate	55.19
17	**715-1201B**	⅜" Quarter Slot Plug (Sd Wet End)	3.50
18	**805-0014B**	O-Ring, -014	1.40
20	**319-1430B**	Basket Assy	17.52
21	**319-4100B**	Lid & Nut & O-ring - 6" Trap	45.10
21a	**805-0436B**	O-Ring - 6" Trap Lid	4.48
26	**310-7500B**	SupraMax ¾ HP Impeller Assembly	67.36
	310-7510B	SupraMax 1 HP Impeller Assembly	67.36
	310-7520B	SupraMax 1.5 HP Impeller Assembly	67.36
	310-7530B	SupraMax 2 HP Impeller Assembly	67.36
27	**315-1400B**	Pump Housing - 2" x 2" Npt	297.14
28	**820-0017-1B**	⅜" Washer, Split Lock	3.40
30	**819-0016B**	⅜"-16 x 2" Lg Hex Head	2.91
	319-1630B	Champion/SMF Volute Assy (Housing, Lid, Nut, Basket & O-Rings)	**

Swivel Union Replacement Parts

Item	Part No.	Description	List (US $)
1	**415-4061B**	2" Self Aligning Union Nut	9.08
2	**417-2111B**	Tailpiece 2" S. Self-Aligning Union - Black	9.26
3	**805-0332B**	O-Ring #332 Self Aligning Union	1.74
4	**417-2121-CPVCB**	Tailpiece 2" MPT, Self-Aligning Union	9.08

** Please request price quote.

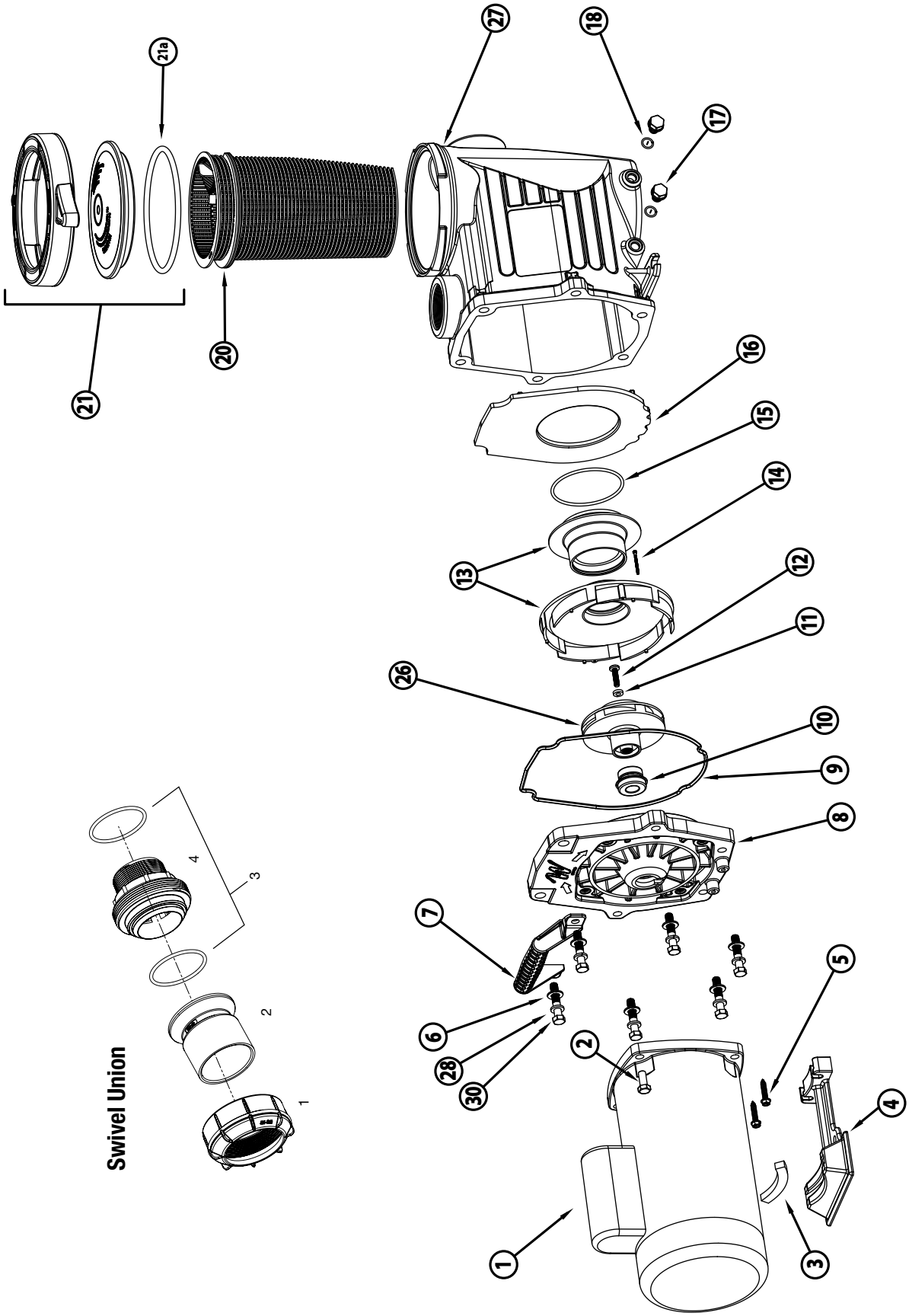
21
21a
20
27
18
17
16
15
14
13
12
11
26
10
9
8
7
6
28
30
2
5
4
1
3
Swivel Union
4
3
2
1

Champion 56-Frame Pump Replacement Parts

Item	Part No.	Description	List (US $)
1	**350VS20-1**	Motor, 56 Frame Variable Spd 230V	**
2	**819-0035B**	Bolt .375-16 x .875 Long	5.12
3	**672-1350B**	Neoprene Motor Support Strip	27.84
4	**319-1500B**	Motor Support Base	60.32
5	**819-0013B**	Screw Slot Hex Washer ¼" x 1 ¼"	1.57
6	**820-0017B**	⅜" Flat Washer Type B, Pool Pumps	1.06
7	**319-1700B**	Handle	41.73
8	**311-1450B**	Face Plate	100.20
9	**806-1400B**	Gasket, Face Plate	7.62
10	**319-3100B**	Pump Seal Set-Viton	25.34
11	**711-4300B**	Washer, Impeller	10.32
12	**819-4360B**	Screw Phil. Pan Head Left Hand ¼-20 x 1"	4.94
13	**310-7470B**	Diffuser Assy	81.92
14	**819-0018B**	#4-40 Uncs Bolt Schs	3.16
15	**805-0238B**	O-Ring-238	4.52
16	**319-1420B**	Diffuser Plate	55.19
17	**715-1201B**	⅜" Quarter Slot Plug (Sd Wet End)	3.50
18	**805-0014B**	O-Ring, -014	1.40
20	**319-1430B**	Basket Assy	17.52
21	**319-4100B**	Lid & Nut & O-ring - 6" Trap	45.10
21a	**805-0436B**	O-Ring - 6" Trap Lid	4.48
26	**310-7400B**	CHAMPS-107 Impeller Assembly	67.36
	310-7410B	CHAMPE-107/CHAMPS-110 /CHAMPS-210 Impeller Assy	67.36
	310-7420B	CHAMPE-110/CHAMPS-115/CHAMPS-210 Impeller Assy	67.36
	310-7430B	CHAMPE-115/CHAMPS-120/ CHAMPS-220 Impeller Assy	67.36
	310-7440B	CHAMPE-120/CHAMPS-125 /CHAMPS-225 Impeller Assy	67.36
	310-7450B	CHAMPE-130 Impeller Assembly	67.36
27	**315-1400B**	Pump Housing - 2" x 2" Npt	297.14
28	**820-0017-1B**	⅜" Washer, Split Lock	3.40
30	**819-0016B**	⅜"-16 x 2" Lg Hex Head	2.91
	319-1630B	Champion/SMF Volute Assy (Housing, Lid, Nut, Basket & O-Rings)	**

Swivel Union Replacement Parts

Item	Part No.	Description	List (US $)
1	**415-4061B**	2" Self Aligning Union Nut	9.08
2	**417-2111B**	Tailpiece 2" S. Self-Aligning Union - Black	9.26
3	**805-0332B**	O-ring #332 Self Aligning Union	1.74
4	**417-2121-CPVCB**	Tailpiece 2" MPT, Self-Aligning Union	9.08

** Please request price quote.

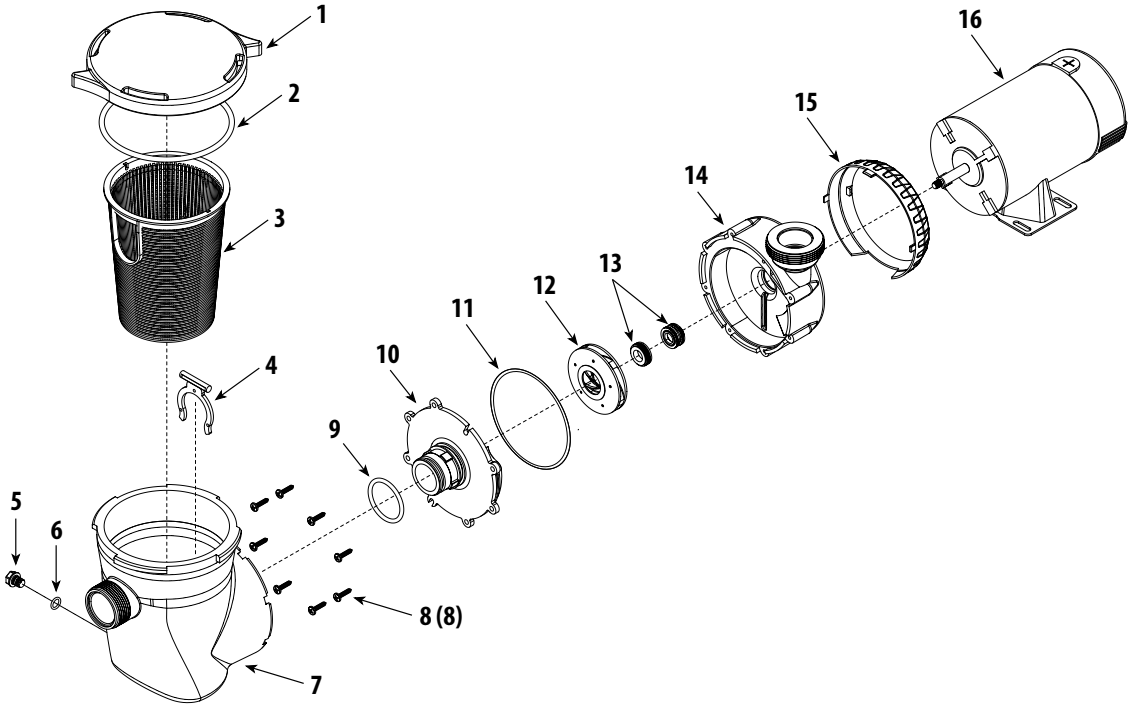

Supreme Pump Replacement Parts

Item	Part No.	Description	List (US $)
1	**511-1310B**	Trap Lid	63.88
2	**805-0439B**	O-Ring #439	7.85
3	**319-1530B**	Trap Basket	21.20
4	**319-1540B**	C-Clip	12.61
5	**715-1201B**	⅜" Quarter Slot Drain Plug	3.50
6	**805-0112B**	O-Ring - Drain Plug	1.41
7	**319-1510B**	Trap Body	247.60
8	**819-0800B**	Screw #12 x 1" Self-Tapping Pan Head Phillips (8 required)	0.96
9	**805-0330B**	O-Ring #2-330	1.68
10	**311-1520B**	Faceplate	107.20
11	**805-0001-SPLB**	O-Ring Face Plate Volute	**
12	**310-5080B**	¾ HP Impeller Assembly	38.26
	310-5090B	1 HP Impeller Assembly	38.26
	310-5100B	1 ½ HP Impeller Assembly	38.26
13	**319-3090B**	Pump Seal Kit	25.34
14	**315-1510B**	Volute	161.22
15	**319-1550B**	Volute Cosmetic Cover	53.89
16	**--**	Motor	**
17	**741-CGGZ-67RB**	3 ft. Electrical Cord - Regular Plug	45.54
18	**741-CGGZ-37LB**	3 ft. Electrical Cord - Twist-lock Plug	43.52

** Please request price quote.

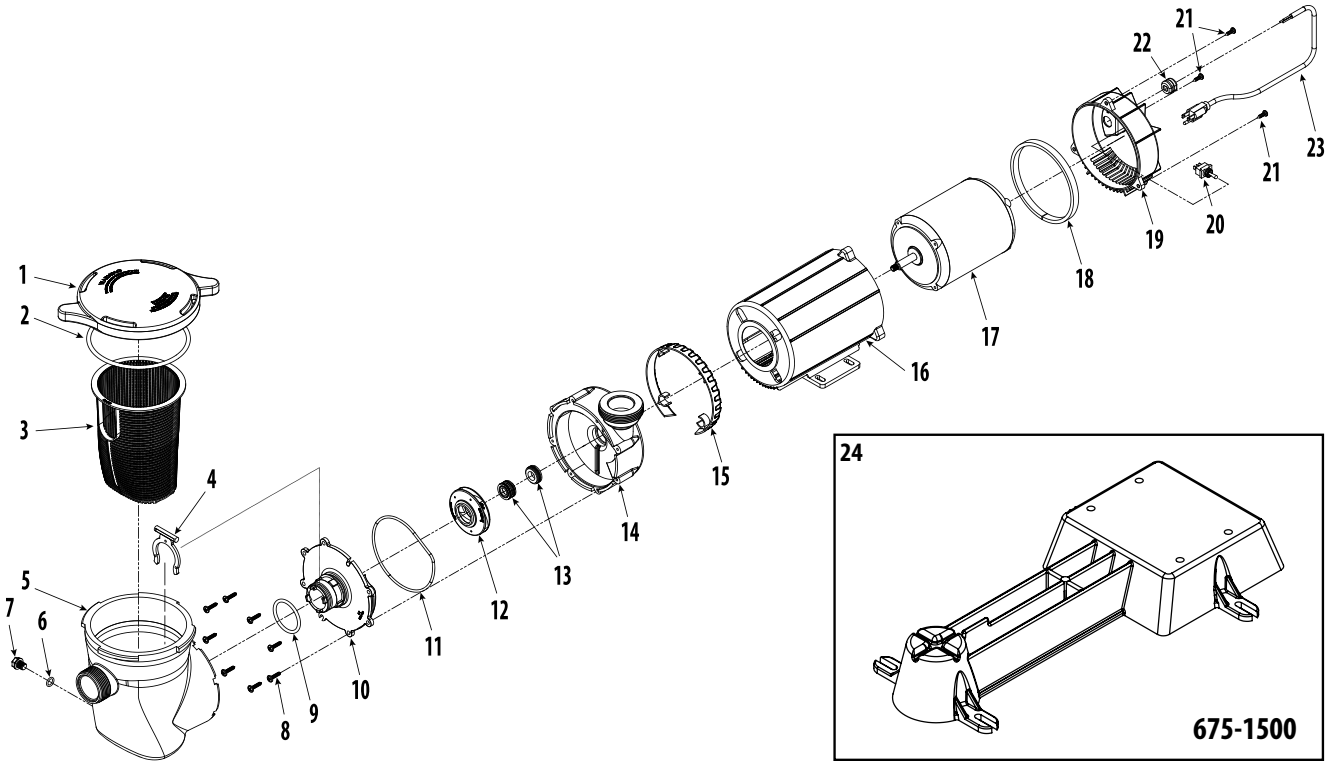

CSA Supreme Pump Replacement Parts

Item	Part No.	Description	List (US $)
1	**511-1310B**	Trap Lid	63.88
2	**805-0439B**	O-Ring #439	7.85
3	**319-1530B**	Trap Basket	21.20
4	**319-1540B**	C-Clip for Poop Pump	12.61
5	**319-1510B**	Trap Body	247.60
6	**805-0112B**	O-Ring - Drain Plug	1.41
7	**715-1201B**	⅜" Quarter Slot Plug	3.50
8	**819-0800B**	Screw #12 x 1" Self-Tapping Pan Head Phillips (8 required)	0.96
9	**805-0330B**	O-Ring #2-330	1.68
10	**311-1520B**	Faceplate	107.20
11	**805-0001-SPLB**	O-Ring Faceplate	**
12	**310-5080B**	¾ HP Impeller Assembly	38.26
	310-5090B	1 HP Impeller Assembly	38.26
	310-5100B	1 ½ HP Impeller Assembly	38.26
13	**319-3010B**	Pump Seal Kit - Viton	**
14	**315-1510B**	Volute	161.22
15	**319-1560B**	Volute Cosmetic Cover	**
16	**319-3500B**	CSA Body Enclosure	57.92
17	**--**	Motor	**
18	**865-0800B**	Foam Ring	**
19	**319-3510B**	CSA Motor End Back Cover	18.89
20	**815-4011B**	Hi-Off-Lo Toggle Switch	13.62
21	**819-9002B**	Screw (3 required) #12 x ¾" Phillips	0.69
22	**813-0025B**	Strain Relief Plug	**
23	**741-CGGZ-257RB**	25 ft. NEMA Cord	**
24	**675-1500B**	CSA Pump Base, Supreme and Hi Flo Pump	**

** Please request price quote.

Replacement Parts / **Hi-Flo & Hi-Flo II Side Discharge Pump**

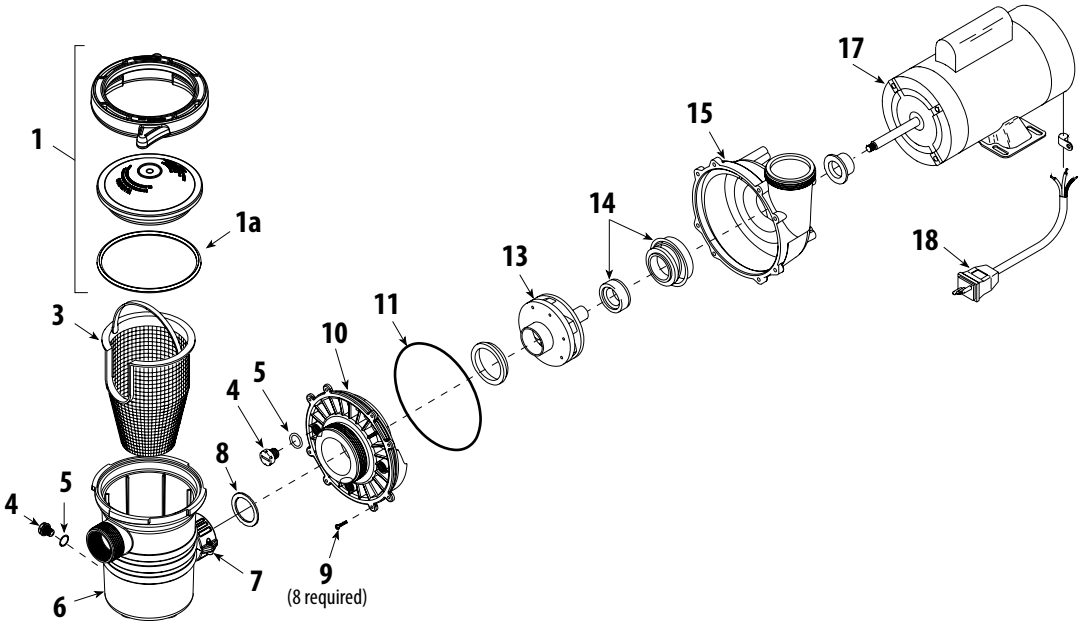

Hi-Flo Side Discharge Pump Replacement Parts

Item	Part No.	Description	List (US $)
1	**319-4100**	Lid & Nut & O-ring - 6" Trap	45.10
1a	**805-0436B**	O-Ring - 6" Trap Lid	4.48
3	**319-3230B**	6" Trap Basket Assembly with Handle	19.55
4	**715-1201B**	⅜" Quarter Slot Drain Plug	3.50
5	**805-0112B**	O-Ring - Drain Plug	1.41
6	**319-2170B**	6" Trap Body - 1 ½" FPT/ 1 ½" Buttress x 2" Union Flange	51.94
7	**400-5161B**	2" Split Nut with Screw	4.66
8	**711-4010B**	2" Union Gasket	1.52
9	**819-1110B**	Screw (8 required)	2.33
10	**311-2140B**	2" Intake Side Discharge Faceplate	42.48
11	**805-0256B**	O-Ring - Faceplate	6.19
13	**310-3990B**	¾ HP Impeller Assembly	30.74
	310-4000B	1 HP Impeller Assembly	30.77
	310-4010B	1 ½ HP Impeller Assembly	30.79
	310-4030B	2 HP Impeller Assembly	30.79
14	**319-3100B**	Pump Seal Kit - Viton	25.34
15	**315-2500B**	Volute Housing - Side Discharge	**
17	**--**	Motor	**
18	**741-CGGZ-67RB**	3 ft. Electrical Cord - Regular Plug	45.54
	741-CGGZ-37LB	3 ft. Electrical Cord - Twist-Lock Plug	43.52

Hi-Flo II Side Discharge Pump Replacement Parts

Item	Part No.	Description	List (US $)
4	**715-4020B**	⅜" Quarter Slot Drain Plug	2.87
10	**311-2170B**	2" Intake Side Discharge Faceplate	39.35
11	**805-0158B**	O-Ring - Faceplate	**
13	**310-8000B**	½ HP Impeller Assembly	29.97
	310-8010B	¾ HP Impeller Assembly	30.14
	310-8020B	1 HP Impeller Assembly	29.97
	310-8030B	1 ½ HP Impeller Assembly	30.14
	310-8040B	2 HP Impeller Assembly	30.09
14	**319-3090B**	Pump Seal Kit - Viton	25.34
15	**315-2520B**	Volute Housing - Side Discharge	**

** Please request price quote.

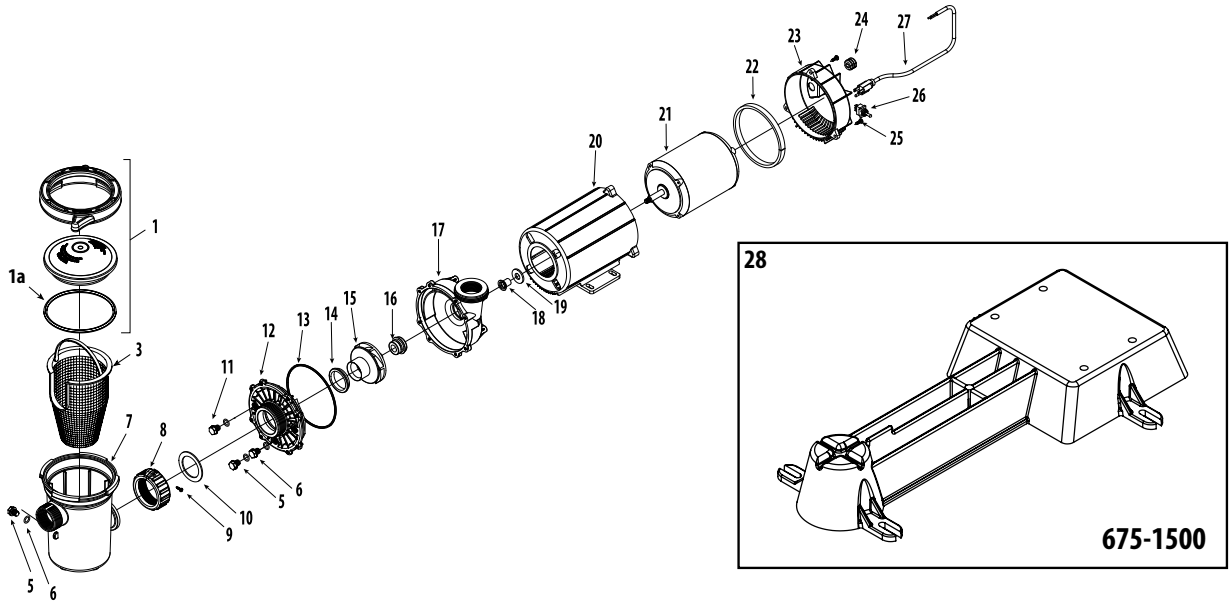

CSA Hi-Flo II Side Discharge Pump Replacement Parts

Item	Part No.	Description	List (US $)
1	**319-4100**	Lid & Nut & O-ring - 6" Trap	45.10
1a	**805-0436B**	O-Ring - 6" Trap Lid	4.48
3	**319-3230B**	6" Trap Basket Assembly with Handle	19.55
5	**715-1201B**	3/8" Quarter Slot Plug (2 required)	3.50
6	**805-0112B**	O-Ring - Drain Plug (2 required)	1.41
7	**319-2170B**	6" Trap Body - 1 ½" FPT / 1 ½" Buttress x 2" Union Flange	51.94
8	**415-5201B**	2" Heater Split Nut x 2 5/16" Gated Flange	**
9	**819-4350B**	Screw (2 required)	**
10	**711-4010B**	2" Union Gasket	1.52
11	**819-1110B**	Screw (8 required)	2.33
12	**311-2140B**	Side Discharge Faceplate	42.48
13	**805-0256B**	O-Ring - Faceplate	6.19
14	**319-1390B**	Wear Ring	8.82
15	**310-3990B**	¾ HP Impeller "B" Assembly	30.74
--	**310-4000B**	1 HP Impeller "C" Assembly	30.77
--	**310-4010B**	1 ½ HP Impeller "D" Assembly	30.79
--	**310-4030B**	2 HP Impeller Assembly	30.79
16	**319-3100B**	Pump Seal Kit	25.34
17	**315-2500B**	Side Discharge Volute with Inserts	**
18	**319-3520B**	CSA Slinger	**
19	**319-3530B**	CSA Slinger Washer	3.66
20	**319-3500B**	CSA Body Enclosure	57.92
21	**--**	Motor	**
22	**865-0800B**	Foam	**
23	**319-3510B**	CSA Back Cover	18.89
24	**813-0025B**	Strain Relief	**
25	**819-9002B**	Screw (3 required)	0.69
26	**815-4011B**	Hi-Off-Lo Toggle Switch	13.62
27	**741-CGGZ-257RB**	NEMA 25ft. Cord	**
28	**675-1500B**	CSA Pump Base, Supreme and Hi-Flo Pump	**

** Please request price quote.

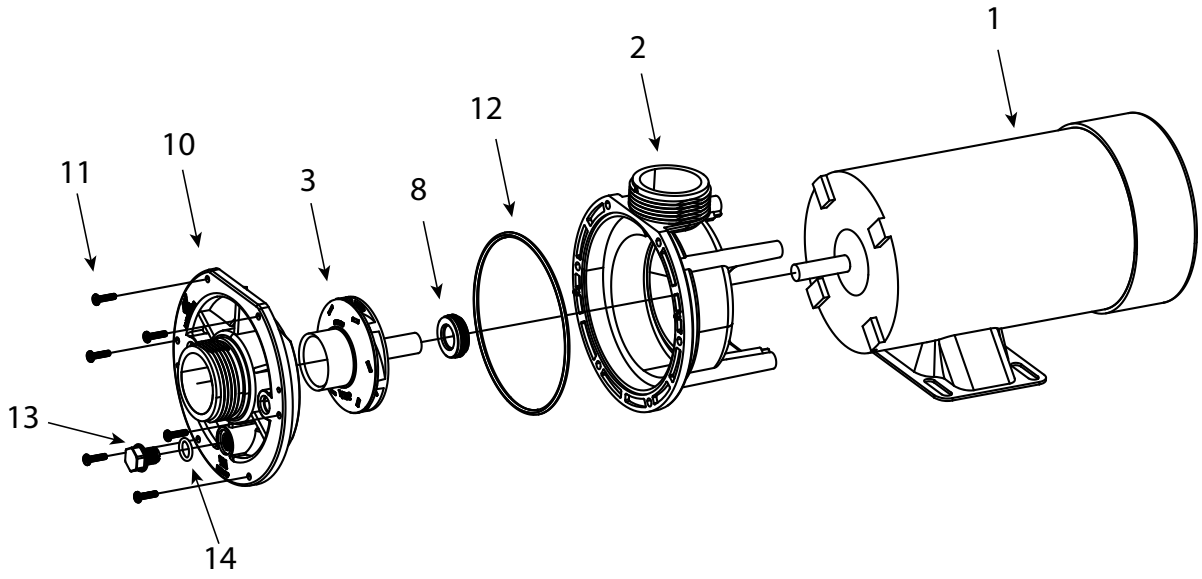

E-Series Center Discharge Pump Replacement Parts			
Item	Part No.	Description	List (US $)
2	**315-1070B**	Volute - Spa & Bath - Center Discharge	50.86
3	**310-8000B**	½ HP Impeller Assembly	29.97
	310-8010B	¾ HP Impeller Assembly	30.14
	310-8020B	1 HP Impeller Assembly	29.97
	310-8030B	1½ HP Impeller Assembly	30.14
	310-8040B	2 HP Impeller Assembly	30.09
8	**319-3090B**	Pump Seal Kit	25.34
10	**311-1070B**	Faceplate - Spa - Center Discharge Wet End	38.75
11	**819-1110B**	Screw - #8 - 32 x ⅝" PPH 18-8	2.33
12	**805-0252B**	O-Ring - #265 - Sand Filter Valve	5.70
13	**715-1201B**	⅜" Quarter Slot Plug (SD Wet End)	3.50
14	**805-0112B**	O-Ring - #112 Pump Drain Plug	1.41

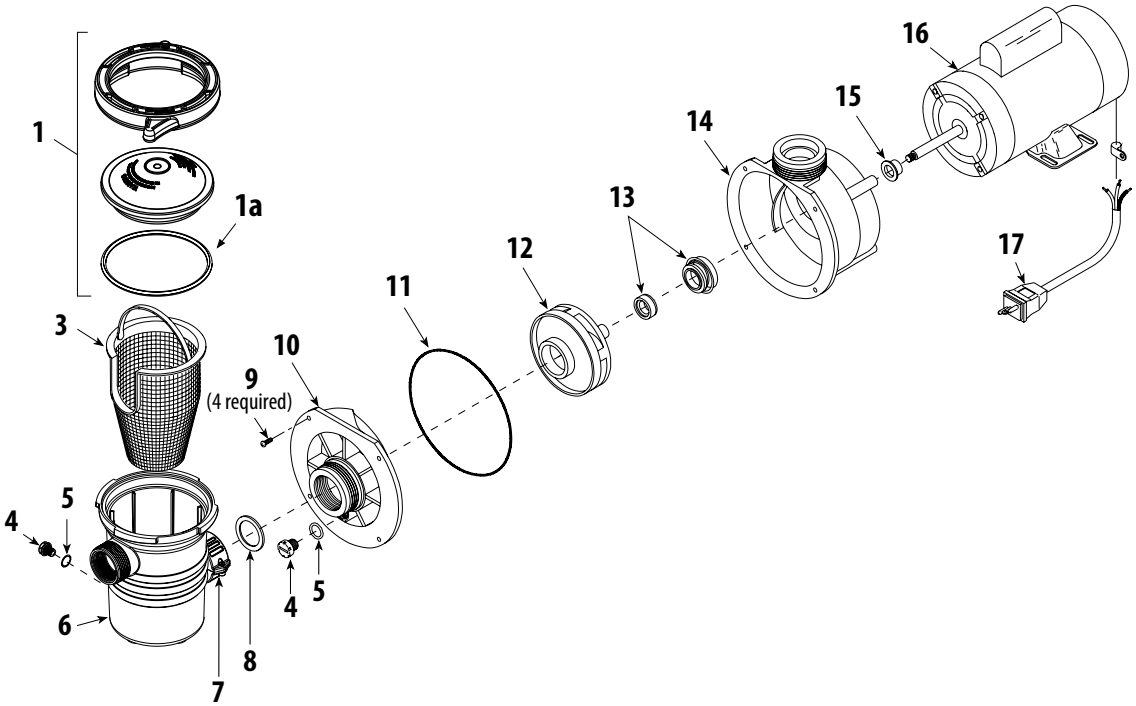

Center Discharge Pump Replacement Parts

Item	Part No.	Description	List (US $)
1	**319-4100B**	Lid & Nut & O-ring - 6" Trap	45.10
1a	**805-0436B**	O-Ring - 6" Trap Lid	4.48
3	**319-3230B**	6" Trap Basket Assembly with Handle	19.55
4	**715-1201B**	⅜" Quarter Slot Plug	3.50
5	**805-0112B**	O-Ring - Pump Drain Plug	1.41
6	**319-2160B**	6" Trap Body - 1 ½" FPT / 1 ½" Buttress x 1 ½" Union Flange	51.94
7	**415-4051B**	1 ½" Split Nut Union Buttress	6.76
8	**711-4000B**	1 ½" Union Gasket	1.41
9	**819-1110B**	Screw (4 required)	2.33
10	**311-1110B**	Faceplate	**
11	**805-0252B**	O-Ring - Faceplate Volute	5.70
12	**310-5110B**	½ HP Impeller "A" Assembly	32.07
	310-5120B	¾ HP Impeller "B" Assembly	30.79
	310-5130B	1 HP Impeller "C" Assembly	**
	310-5140B	1 ½ HP Impeller "D" Assembly	30.79
	310-5200B	2 HP Impeller "E" Assembly	30.79
13	**319-3100B**	Seal Set	25.34
14	**315-1120B**	Volute	41.62
	315-1050B	Jacuzzi Style Volute	67.18
15	**313-1400B**	Slinger	2.11
16	**--**	Motor	**
17	**741-CGGZ-67RB**	3 ft. Cord - Regular Plug	45.54
	741-CGGZ-37LB	3 ft. Cord - Twist-Lock Plug	43.52

** Please request price quote.

Replacement Parts / **Workman Pump (Discontinued)**

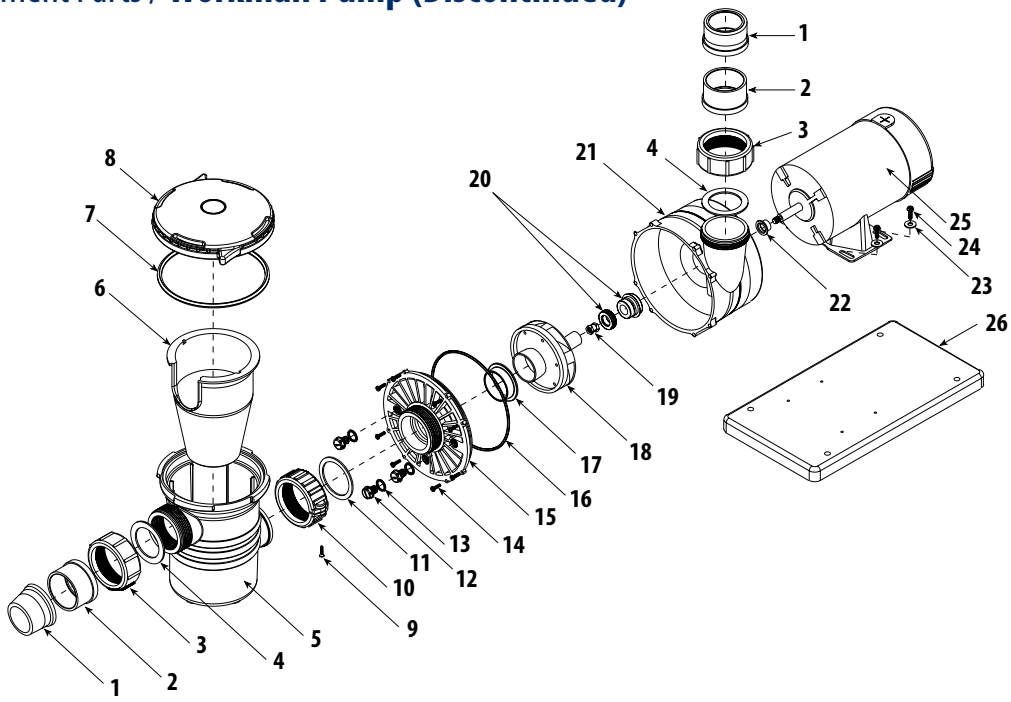

Workman Pump Replacement Parts

Item	Part No.	Description	List (US $)
1	**417-5130B**	Tailpiece - (2" Spigot x 1 ½" FPT) - O-Ring Grove *(optional)*	**
2	**417-5121B**	2" Tailpiece	4.43
3	**415-5001B**	2" Union Nut	4.71
4	**711-4010B**	2" Union Gasket	1.52
5	**319-5300B**	Workman Trap 2" FPT / 2" Buttress x 2" Union Flange	**
6	**319-3210B**	6" Trap Basket	15.64
7	**805-0436B**	O-Ring - 6" Trap Lid	4.48
8	**319-3260B**	Lid - 6" Trap - Self-Locking	**
9	**819-1040B**	Screw #8 x ¾ Stainless Steel Phillips	**
10	**400-5301B**	Workhorse Trap Split-Nut Assembly with Screw	**
11	**711-5300B**	2" Gasket - Workhorse Trap	**
12	**715-1201B**	⅜" Quarter Slot Plug	3.50
13	**805-0112B**	O-Ring - Pump Drain Plug	1.41
14	**819-1110B**	Screw #8 32 x ⅝ PPH 18-8	2.33
15	**311-1220B**	Executive Volute Faceplate 2" Intake	50.91
16	**805-0261B**	O-Ring 261 - Volute for Executive Faceplate	5.80
17	**319-1380B**	Wear Ring - Executive ¾, 1, 2, and 3 HP	7.90
18	**310-1020B**	¾ HP Impeller Assembly	**
	310-1030B	1 HP Impeller Assembly	**
	310-1040B	1 ½ HP Impeller Assembly	**
	310-1050B	2 HP Impeller Assembly	**
	310-1060B	3 HP Impeller Assembly	**
19	**820-4150B**	Coupling Nut - Impeller	**
20	**319-3100B**	Pump Seal Kit	25.34
21	**315-1240B**	48-Frame Volute with Inserts	48.50
22	**313-1400B**	Slinger	2.11
23	**820-0018B**	F/Washer	0.49
24	**819-9001B**	Screw #12 x ¾ Slot Hex Washer	**
25	**--**	Motor	**
26	**672-1060B**	Equipment Base - 1" x 8 ½" x 15 ½"	**

** Please request price quote.

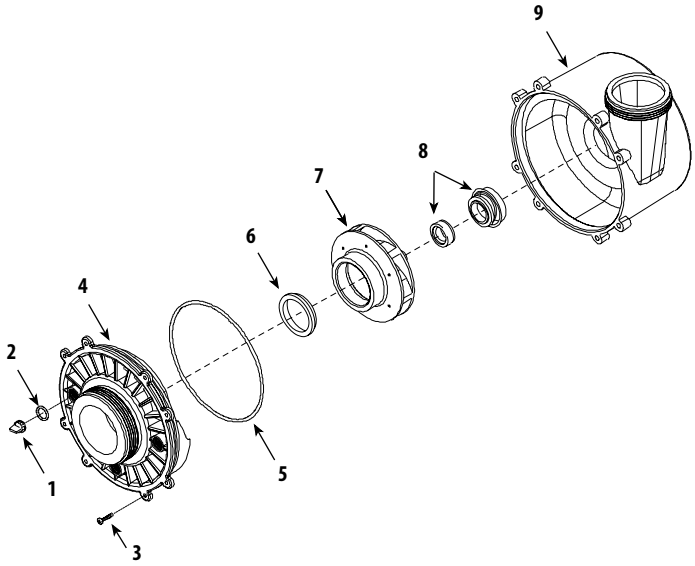

Executive 56-Frame Wet End Replacement Parts

Item	P art No.	Description	List (US $)
1	**715-1201B**	3/8" Quarter Slot Plug - Air Relief	3.50
2	**805-0112B**	O-Ring - #111 - Pump Drain Plug	1.41
3	**819-1110B**	Screw - #8 - 32 x 7/16" PPH	2.33
4	**311-1210B**	Executive Faceplate 2 ½"	50.95
	311-1220B	Executive Faceplate 2"	50.91
5	**805-0261B**	O-Ring 261 - Volute for Executive Faceplate	5.80
6	**319-1370B**	Wear Ring - Executive Pump 4 & 5 HP	7.90
	319-1380B	Wear Ring - Executive Pump ¾, 1, 2, and 3 HP	7.90
7	**310-4220B**	1 HP Impeller Assembly	35.47
	310-4210B	2 HP Impeller Assembly	35.47
	310-4200B	3 HP Impeller Assembly	35.48
	310-4190B	4 HP Impeller Assembly	35.49
	310-4180B	5 HP Impeller Assembly	**
8	**319-3100B**	Pump Seal Set	25.34
9	**315-1220B**	Executive Volute 56-Frame with Inserts	**

Executive 48-Frame Wet End Replacement Parts

Item	Part No.	Description	List (US $)
1	**715-1201B**	3/8" Quarter Slot Plug - Air Relief	3.50
2	**805-0112B**	O-Ring - #111 - Pump Drain Plug	1.41
3	**819-1110B**	Screw - #8 - 32 x 7/16" PPH	2.33
4	**311-1210B**	Executive Faceplate 2 ½"	50.95
	311-1220B	Executive Faceplate 2"	50.91
5	**805-0261B**	O-Ring 261 - Volute for Executive Faceplate	5.80
6	**319-1370B**	Wear Ring - Executive Pump 4 & 5 HP	7.90
	319-1380B	Wear Ring - Executive Pump ¾, 1, 2 and 3 HP	7.90
7	**310-4230B**	1 HP Motor - ¾ HP Impeller Assembly	34.88
	310-4220B	1 ½ HP Motor - 1 HP Impeller Assembly	35.47
	310-4210B	2 HP Motor - 2 HP Impeller Assembly	35.47
	310-4200B	3 HP Motor - 2 HP Impeller Assembly	35.48
	310-4200B	4 HP Motor - 3 HP Impeller Assembly	35.48
8	**319-3100B**	Pump Seal Set	25.34
9	**315-1240B**	Executive Volute 48-Frame with Inserts	48.50

** Please request price quote.

Replacement Parts / **EX2 Wet End**

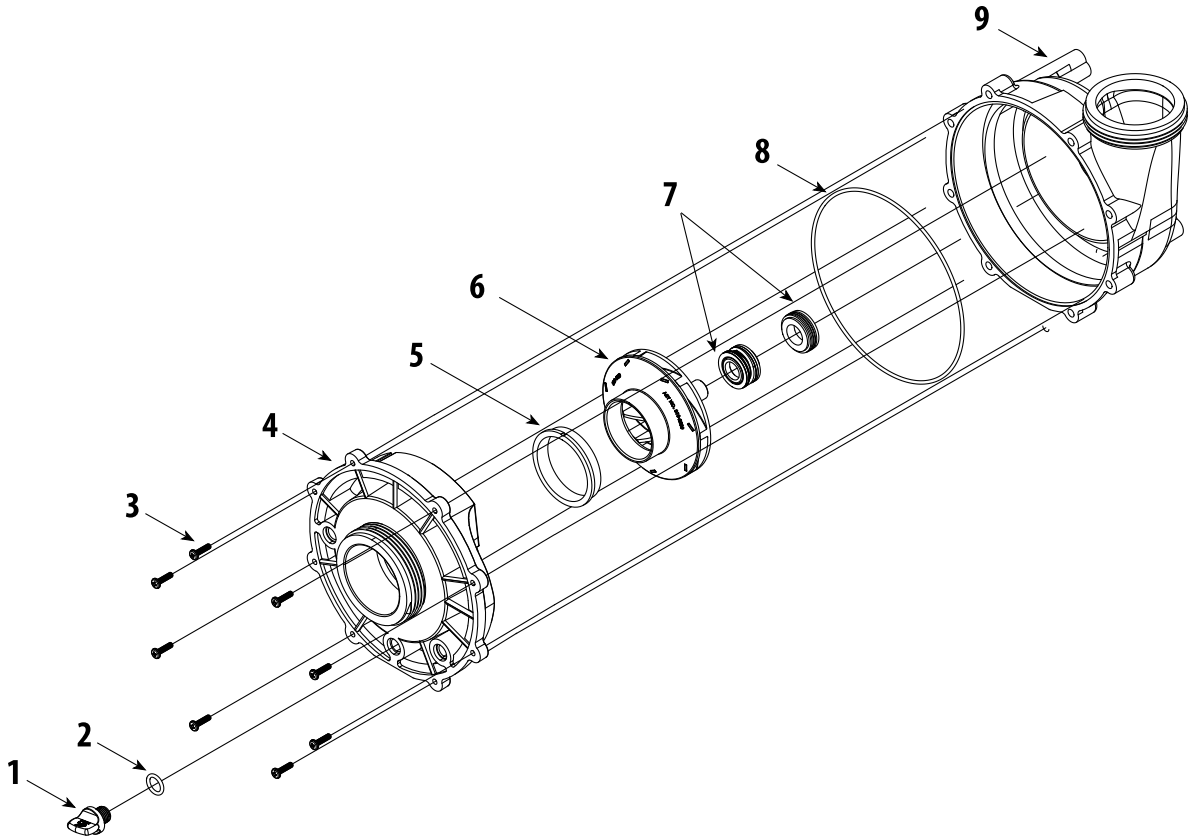

EX2 Wet End Replacement Parts			
Item	Part No.	Description	List (US $)
1	**715-4020B**	Pump Drain Plug	2.87
2	**805-0112B**	O-Ring - Pump Drain Plug	1.41
3	**819-1110B**	Screw #8-32	2.33
4	**311-2311B**	Volute Faceplate	50.24
5	**319-1270B**	Wear Ring	7.22
6	**310-2330B**	Impeller Assembly - 1 ½ HP	35.96
	310-2340B	Impeller Assembly - 2 HP	34.88
	310-2300B	Impeller Assembly - 2 ½ HP	34.88
	310-2350B	Impeller Assembly - 3 HP	34.88
7	**319-3090B**	Pump Seal Kit	25.34
8	**805-0164B**	O-Ring #164	5.56
9	**315-2301B**	Volute Housing	48.04

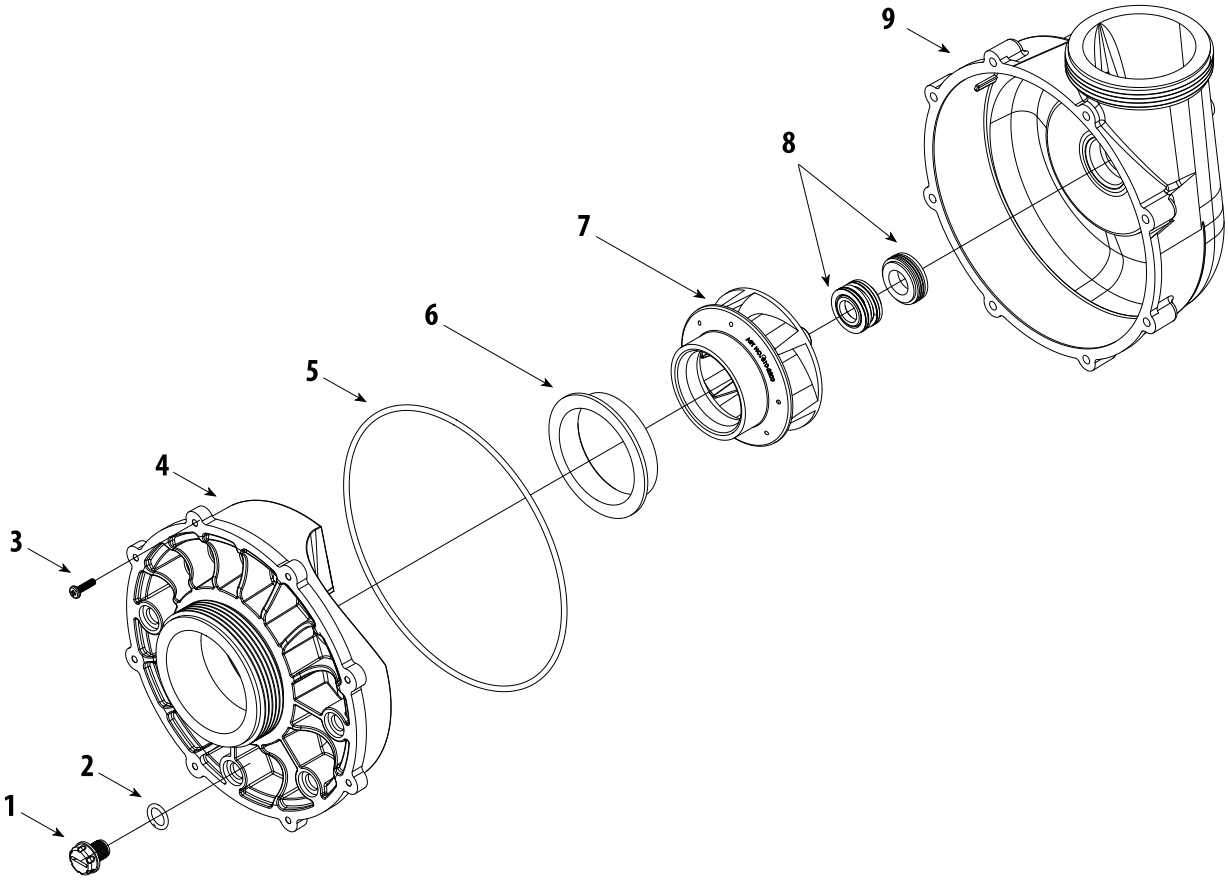

Viper Wet End Replacement Parts

Item	Part No.	Description	List (US $)
1	**715-1201B**	3/8" Quarter Slot Pump Drain Plug	3.50
2	**805-0112B**	O-Ring - Pump Drain Plug	1.41
3	**819-1110B**	Screw #8-32 (8 required)	2.33
4	**311-1510B**	Volute Faceplate	51.41
5	**805-0264B**	Volute O-Ring	**
6	**313-3210B**	Wear Ring	7.27
7	**310-2260B**	Impeller Assembly - 2 HP	**
	310-2270B	Impeller Assembly - 3 HP	34.88
	310-2200B	Impeller Assembly - 4 HP	34.88
	310-2620B	Impeller Assembly - 5 HP	40.44
8	**319-3090B**	Pump Seal Kit	25.34
9	**315-1500B**	Volute	21.71

** Please request price quote.

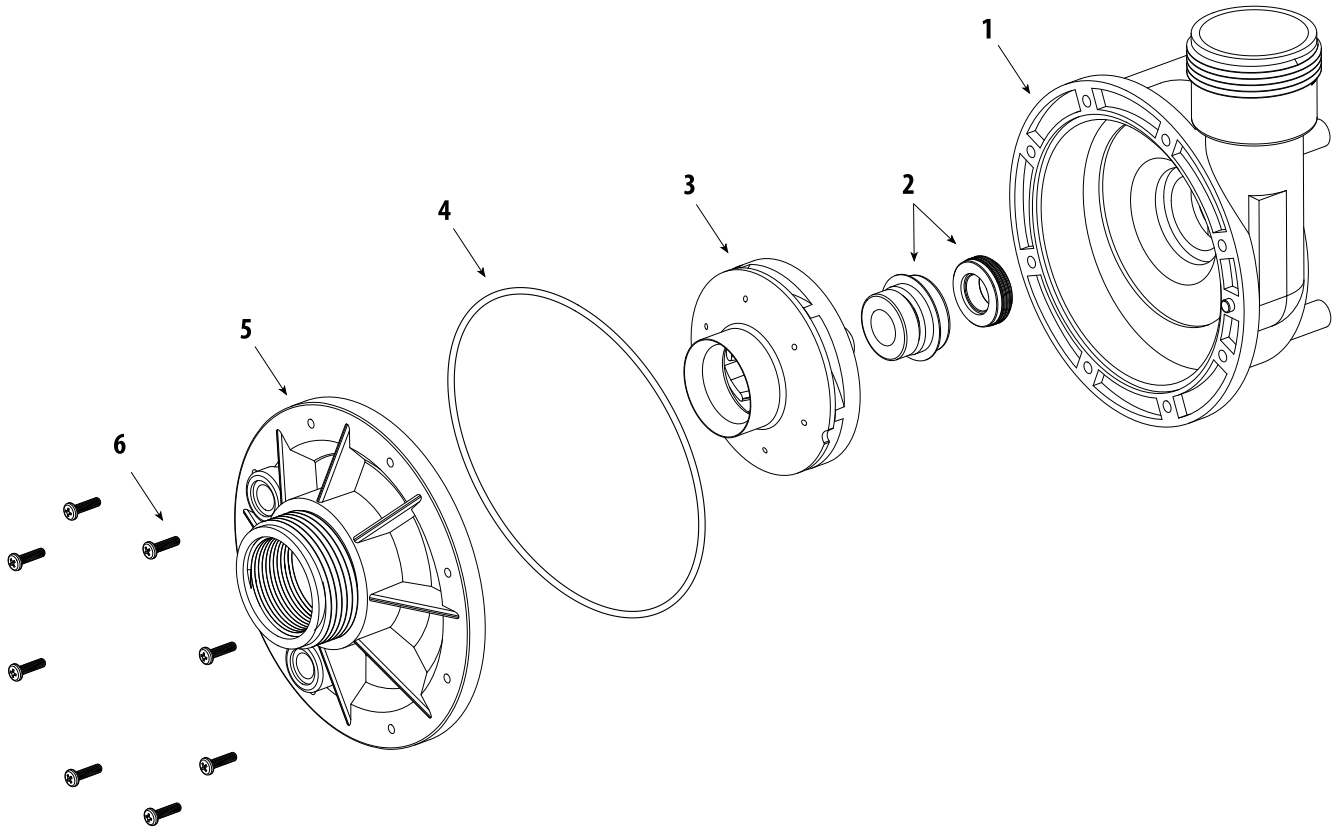

Spa Flo and Iron Might Wet End Replacement Parts			
Item	Part No.	Description	List (US $)
1	**315-1060B**	Volute	57.26
2	**319-3090B**	Pump Seal Kit	25.34
3	**310-0900B**	Iron Might Impeller Assembly	30.78
	310-4060B	Spa Flo Impeller Assembly - 1 HP	30.16
	310-4070B	Spa Flo Impeller Assembly - 1.5 HP	30.14
	310-4090B	Spa Flo Impeller Assembly - 2 HP	30.14
4	**805-0248B**	Volute O-Ring	9.86
5	**311-1060B**	Faceplate	38.37
6	**819-1110B**	#8-32 Screw *(8 required)*	2.33

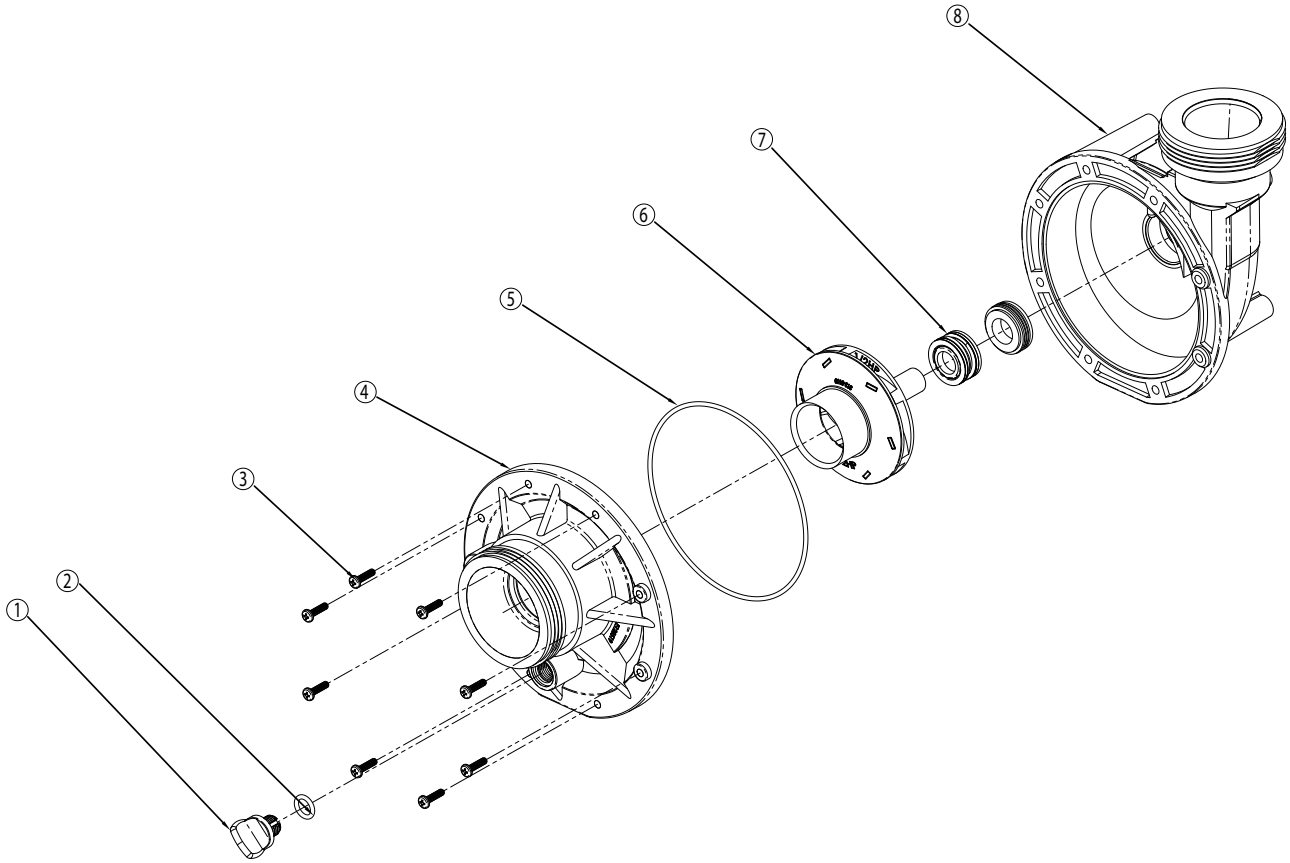

Spa Flo II Wet End Replacement Parts

Item	Part No.	Description	List (US $)
1	**715-4020B**	Drain Plug	2.87
2	**805-0112B**	O-ring - Drain Plug	1.41
3	**819-1110B**	Screw #8 - 32 x 5/8" PPH 18 - 8	2.33
4	**311-2160B**	Faceplate 1.5"	40.33
5	**805-0158B**	O-ring Faceplate	**
6	**310-8000B**	½ HP Impeller Assembly	29.97
	310-8010B	¾ HP Impeller Assembly	30.14
	310-8020B	1 HP Impeller Assembly	29.97
	310-8030B	1.5 HP Impeller Assembly	30.14
	310-8040B	2 HP Impeller Assembly	30.09
7	**319-3090B**	Pump Seal Set	25.34
8	**315-2510B**	Side Discharge Volute 1.5"	54.43

** Please request price quote.

Replacement Parts / **Hi-Flo Side Discharge Wet End**

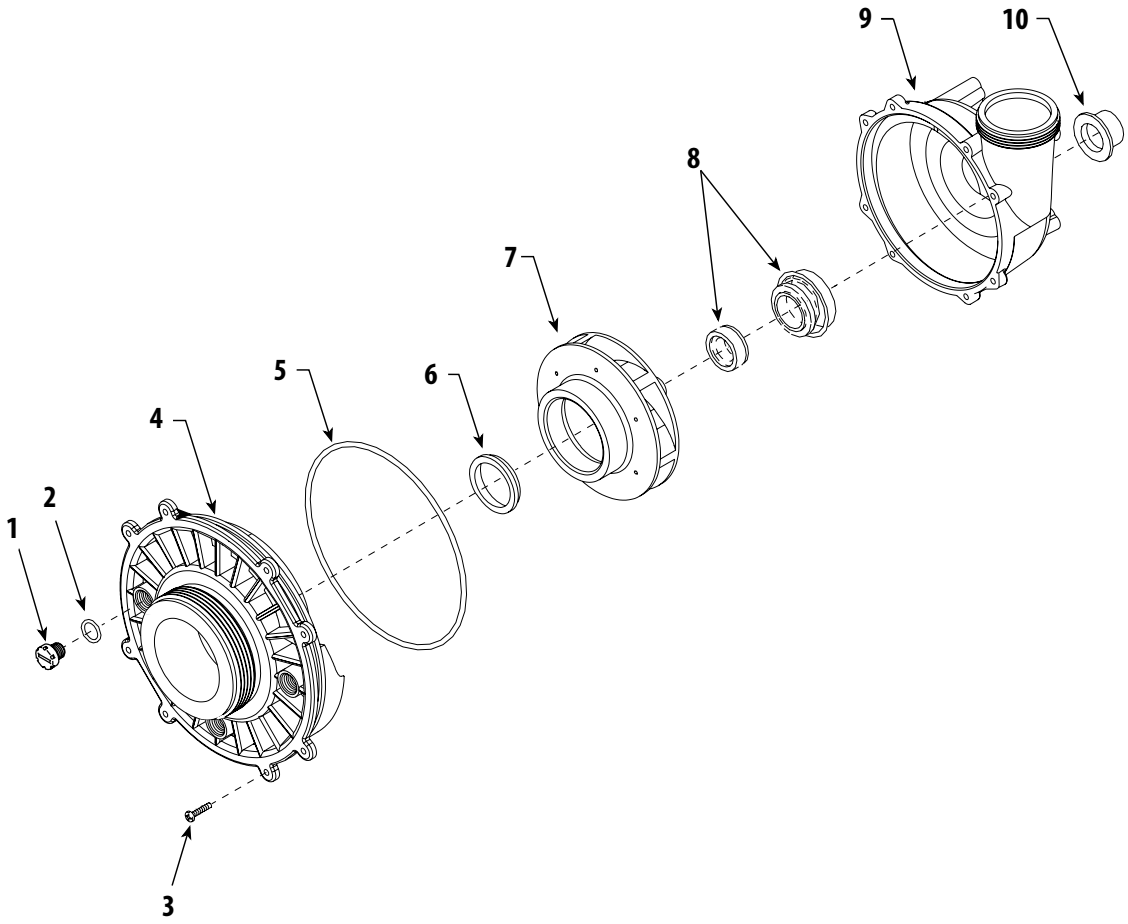

Hi-Flo Side Discharge Wet End Replacement Parts			
Item	Part No.	Description	List (US $)
1	**715-1201B**	3/8" Quarter Slot Drain Plug	3.50
2	**805-0112B**	O-Ring - Pump Drain Plug	1.41
3	**819-1110B**	Screw	2.33
4	**311-2140B**	2" Intake Faceplate	42.48
5	**805-0256B**	O-Ring - Faceplate	6.19
6	**319-1390B**	Wear Ring	8.82
7	**310-4000B**	1 HP Impeller "C" Assembly	30.77
	310-4010B	1 ½ HP Impeller "D" Assembly	30.79
	310-4030B	2 HP Impeller Assembly	30.79
	310-4020B	3 HP Impeller Assembly	30.79
	310-4050B	4 HP Impeller Assembly	30.79
8	**319-3100B**	Pump Seal Kit	25.34
9	**315-2500B**	Side Discharge Volute with Inserts	**
10	**313-1400B**	Slinger	2.11

** Please request price quote.

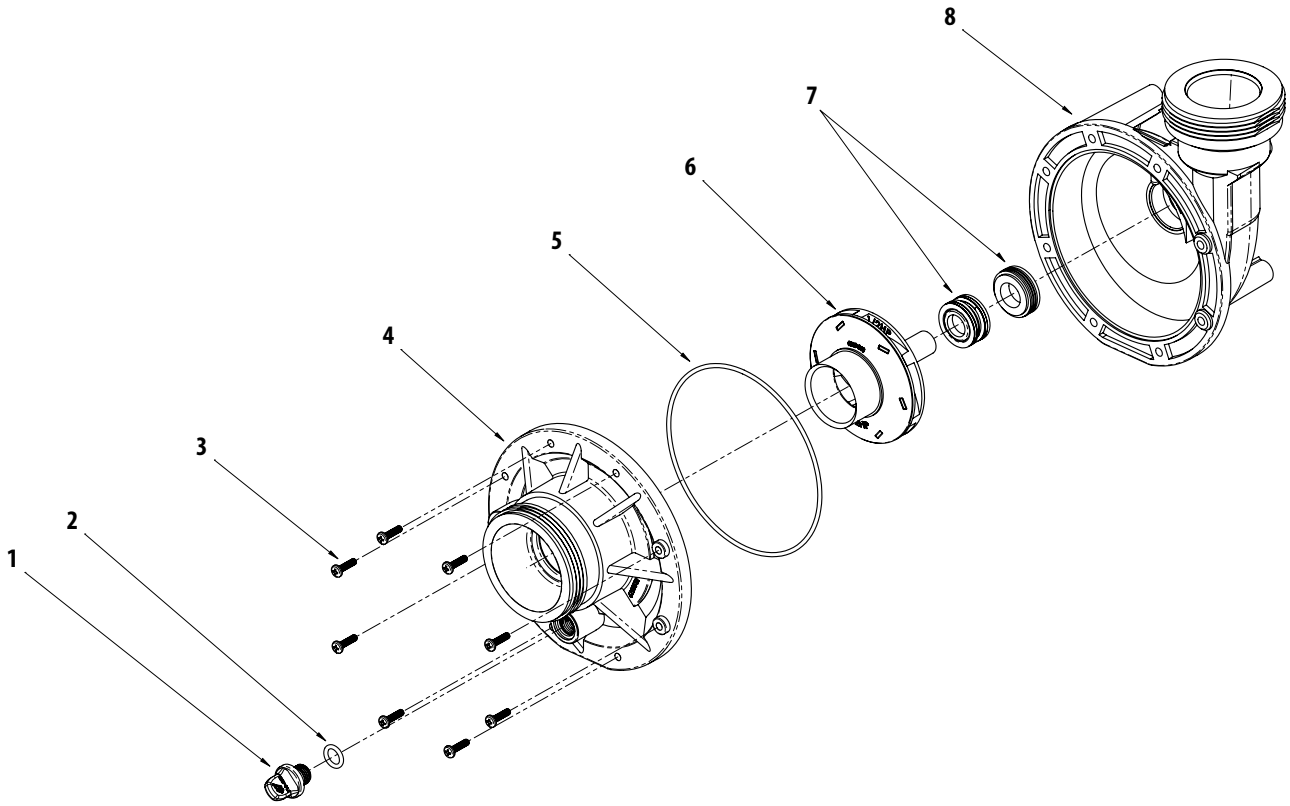

Hi-Flo II Side Discharge Wet End Replacement Parts			
Item	Part No.	Description	List (US $)
1	**715-4020B**	Drain Plug	2.87
2	**805-0112B**	O-ring - Drain Plug	1.41
3	**819-1110B**	Screw #8 - 32 x ⅝" PPH 18 - 8	2.33
4	**311-2170B**	Faceplate 2"	39.35
5	**805-0158B**	O-ring Faceplate	**
6	**310-8000B**	½ HP Impeller Assembly	29.97
	310-8010B	¾ HP Impeller Assembly	30.14
	310-8020B	1 HP Impeller Assembly	29.97
	310-8030B	1.5 HP Impeller Assembly	30.14
	310-8040B	2 HP Impeller Assembly	30.09
7	**319-3090B**	Pump Seal Set	25.34
8	**315-2520B**	Side Discharge Volute 2"	**

** Please request price quote.

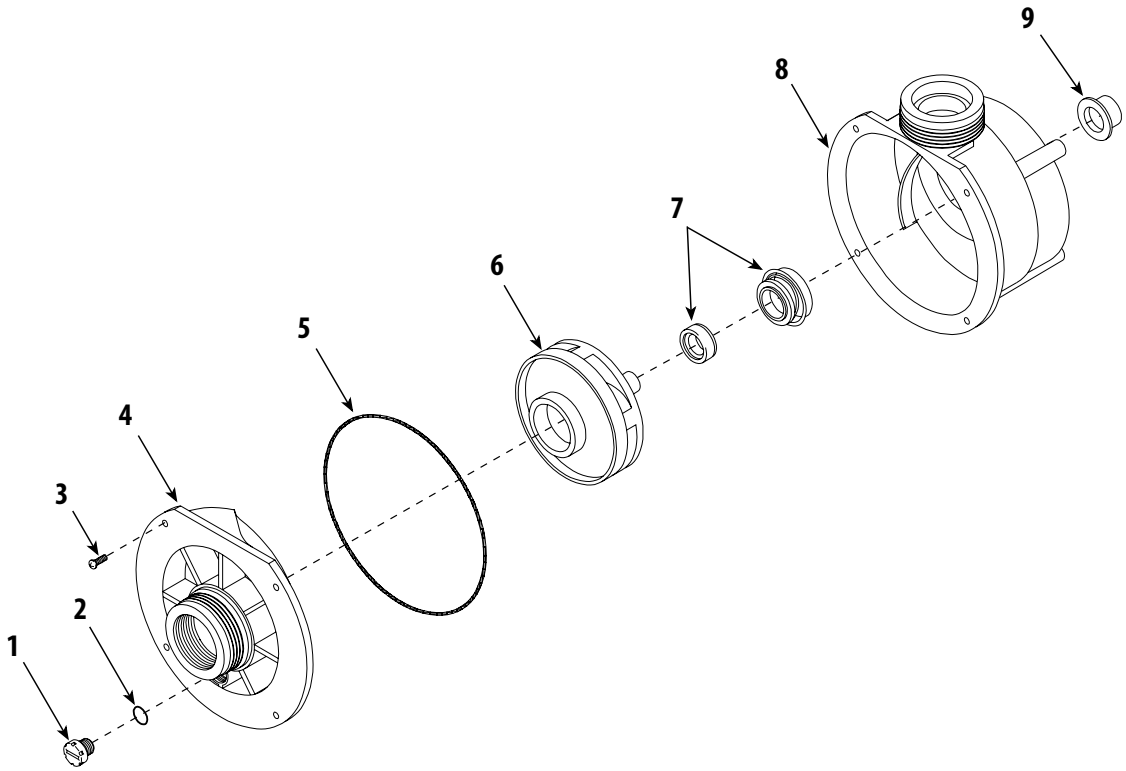

Center Discharge Wet End Replacement Parts

Item	Part No.	Description	List (US $)
1	**715-1201B**	⅜" Quarter Slot Drain Plug	3.50
2	**805-0112B**	O-Ring - Pump Drain Plug	1.41
3	**819-1110B**	Screw #8-32	2.33
4	**311-1110B**	Faceplate - Spa Series	**
5	**805-0252B**	O-Ring - Faceplate	5.70
6	**310-5120B**	¾ HP Impeller Assembly	30.79
	310-5130B	1 HP Impeller Assembly	**
	310-5140B	1 ½ HP Impeller Assembly	30.79
	310-5200B	2 HP Impeller Assembly	30.79
7	**319-3100B**	Pump Seal Kit	25.34
8	**315-1120B**	Spa & Bath Volute	41.62
9	**313-1400B**	Slinger	2.11

** Please request price quote.

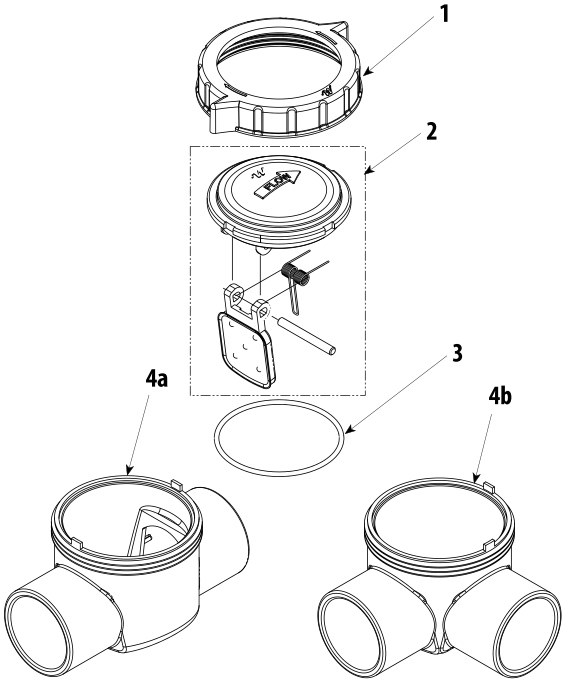

TruSeal Serviceable Check Valve

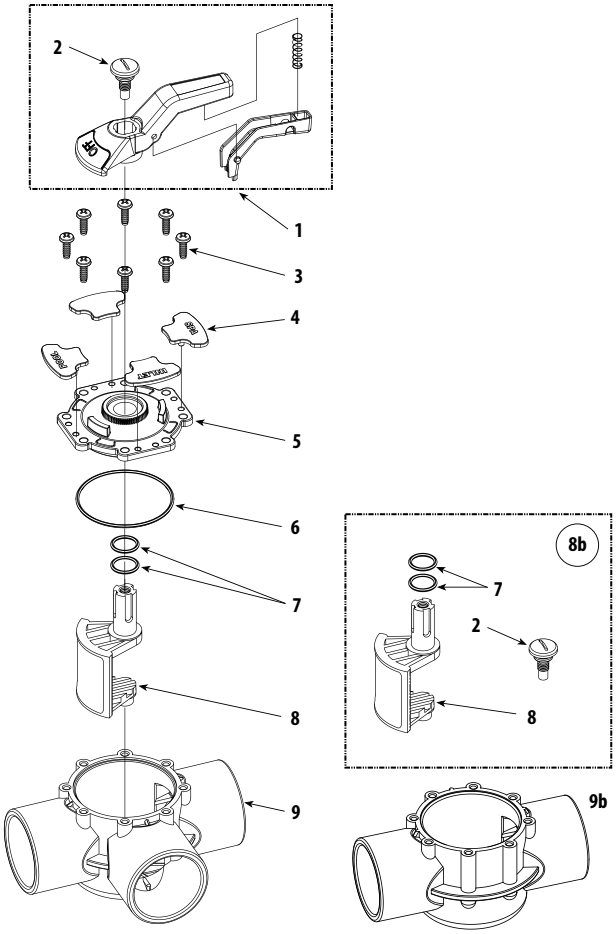

TruSeal Diverter Valve

TruSeal Serviceable Check Valve Replacement Parts

Item	Part No.	Description	List (US $)
1	**718-7027B**	Nut	**
2	**600-7300B**	Lid Assembly	35.50
3	**805-0239B**	O-Ring - Lid	1.66
4a	**602-7070B**	Valve Body	**
4b	**602-7000B**	Ell Valve Body	**

TruSeal Diverter Valve Replacement Parts

Item	Part No.	Description	List (US $)
1	**600-7171B**	Handle Assembly *(sold as Assembly Only)*	29.39
2	**715-1307B**	Screw - Handle	6.11
3	**819-0025B**	Screw - 14 & ¾" Phil Pan.	1.99
4	**600-7180B**	Flow Label Assembly	**
5	**602-7251B**	Lid	15.45
6	**805-0151B**	O-Ring - Lid	4.00
7	**805-0116EPB**	O-Ring *(2 required per Valve)*	0.94
8	**602-7140B**	Diverter Arm	11.83
8b	**600-7160B**	Diverter Kit	41.68
9	**602-7200B**	Body	**
9b	**602-7071B**	Body Straight 1 ½" spg	32.70
-	**602-7011B**	Body Straight 2 ½" spg	32.70

** Please request price quote.

Notes

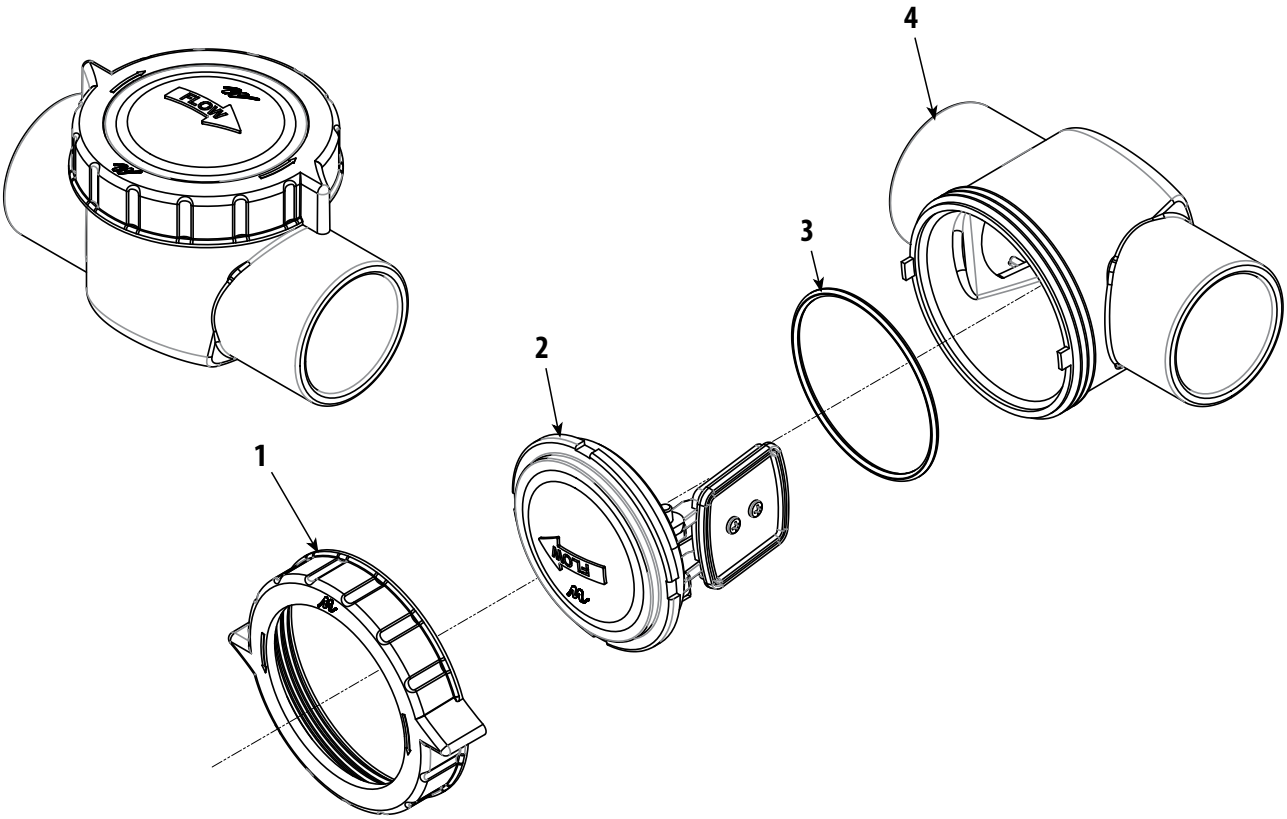

TruSeal 3" Check Valve Replacement Parts			
Item	Part No.	Description	List (US $)
1	**718-7031-CPVCB**	Threading Nut	14.02
2	**605-0111B**	Lid and Flapper Assembly	60.34
3	**805-0241B**	O-Ring, #2-241, 3.859 I.D x 4.137 O.D. x .139 W	2.83
4	**602-0121B**	Body, Check Valve, 2.5 S/3" SPG x 2.5 S/3" SPG	47.96

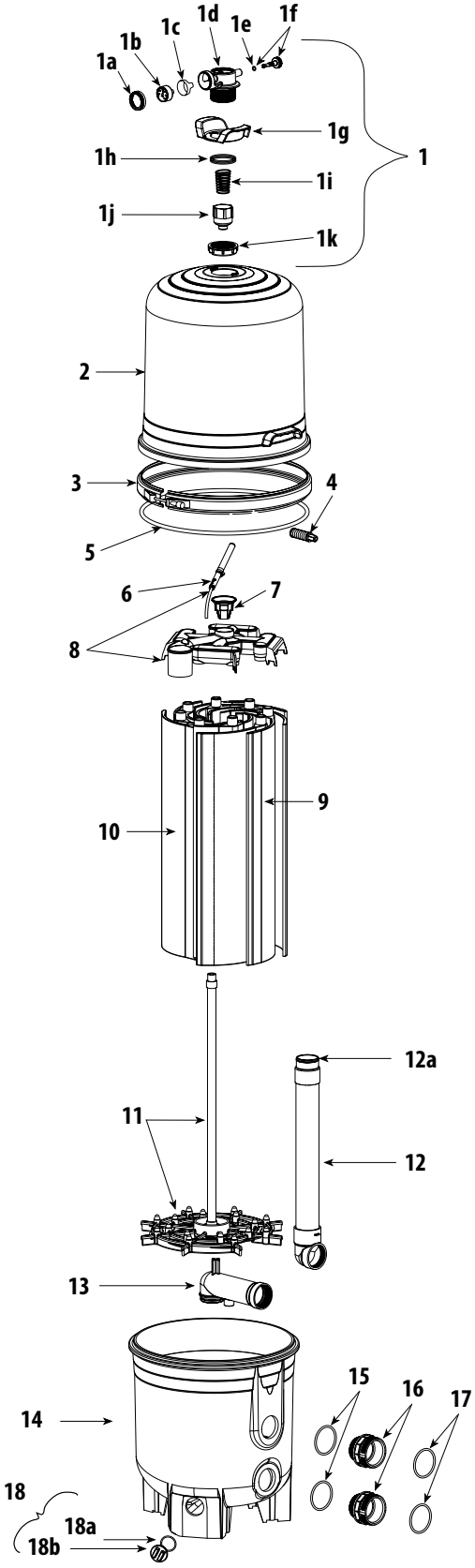
1a
1b
1c
1d
1e
1f
1g
1h
1i
1j
1k
1
2
3
4
5
6
7
8
9
10
11
12a
12
13
14
15
16
17
18
18a
18b

Crystal Water D.E. Filter Replacement Parts

Item	Part No.	Description	List (US $)
1	**550-4230B**	Pressure Relief Valve Assembly	103.96
1a	**600-4101B**	Bezel Assembly - Pressure Gauge	13.38
1b	**830-4000SSB**	Pressure Gauge	**
1c	**711-1670B**	Rubber Boot - Pressure Gauge	2.58
1d	**519-4281B**	Air Relief Valve Body	63.57
1e	**805-0110B**	O-Ring - ½" Air Control	3.29
1f	**550-4240B**	Pressure Relief Screw with O-Ring	6.37
1g	**602-4201B**	Handle - Air Relief Valve	33.11
1h	**805-0233B**	O-Ring - Filter Handle (2 required)	**
1i	**827-8150B**	Spring - Water Bypass Valve	11.71
1j	**519-4370B**	Plunger	11.73
1k	**718-4201B**	Air Relief Valve Nut	7.96
2	**550-4450B**	Filter Lid with D.E. Crystal Water Filter Labels - 36 sq. ft.	429.25
	550-4430B	Filter Lid with D.E. Crystal Water Filter Labels - 48 sq. ft.	495.31
	550-4440B	Filter Lid with D.E. Crystal Water Filter Labels - 60 sq. ft.	561.29
3	**550-4260B**	Metal Clamp with Clamp Spring Assembly	**
4	**550-4250B**	Clamp Spring Assembly	**
5	**805-0000B**	O-Ring - Main Body	28.43
6	**550-4320B**	Air Relief Assembly	40.96
7	**718-4320B**	Manifold Nut	7.81
8	**550-4200B**	D.E. Manifold Assembly with Air Relief Assembly	112.68
--	**550-4110B**	D.E. Grid and Manifold Assembly with Air Relief Assembly - 36 sq. ft.	516.87
--	**550-4120B**	D.E. Grid and Manifold Assembly with Air Relief Assembly - 48 sq. ft.	590.35
--	**550-4130B**	D.E. Grid and Manifold Assembly with Air Relief Assembly - 60 sq. ft.	698.35
9	**818-3940B**	D.E. Short Grid with Mesh Assembly - 36 sq. ft.	58.10
	818-3900B	D.E. Short Grid with Mesh Assembly - 48 sq. ft.	68.47
	818-3920B	D.E. Short Grid with Mesh Assembly - 60 sq. ft.	79.63
10	**818-3950B**	D.E. Full Grid with Mesh Assembly - 36 sq. ft.	54.49
	818-3910B	D.E. Full Grid with Mesh Assembly - 48 sq. ft.	63.62
	818-3930B	D.E. Full Grid with Mesh Assembly - 60 sq. ft.	**
11	**550-4380B**	D.E. Grid Support Assembly with 20" PVC Shaft - 36 sq. ft.	42.49
	550-4310B	D.E. Grid Support Assembly with 26" PVC Shaft - 48 sq. ft.	54.51
	550-4350B	D.E. Grid Support Assembly with 32" PVC Shaft - 60 sq. ft.	59.50
12	**550-4390B**	2 ½" Outlet Elbow Assembly - 36 sq. ft. D.E. Filter	99.04
	550-4220B	2 ½" Outlet Elbow Assembly - 48 sq. ft. D.E. Filter	99.06
	550-4210B	2 ½" Outlet Elbow Assembly - 60 sq. ft. D.E. Filter	132.75
12a	**805-0145B**	O-Ring - 2" Tailpiece	1.40
13	**550-4410B**	Long Elbow Fitting - 2 ½" diameter	77.16
14	**515-4207B**	Filter Body Base	561.30
15	**805-0339B**	O-Ring (2 required)	9.45
16	**419-4201B**	2 ½" Bulkhead Fitting (2 required)	38.88
17	**711-4200B**	2 ½" Beveled Gasket (2 required)	5.78
18	**400-6621B**	Drain Assembly *(New Style)*	3.05
18a	**805-0224B**	Drain O-Ring (224) *(New Style)*	1.41
18b	**715-6611B**	Drain Plug - 1 ½" MPT *(New Style)*	3.04
--	**500-5310B**	Drain Assembly (Plug, O-Rings, Base Fitting) *(Old Style 2 - not shown)*	**
--	**400-6601B**	Drain Plug with O-Ring *(Old Style 2 - not shown)*	2.87

** Please request price quote.

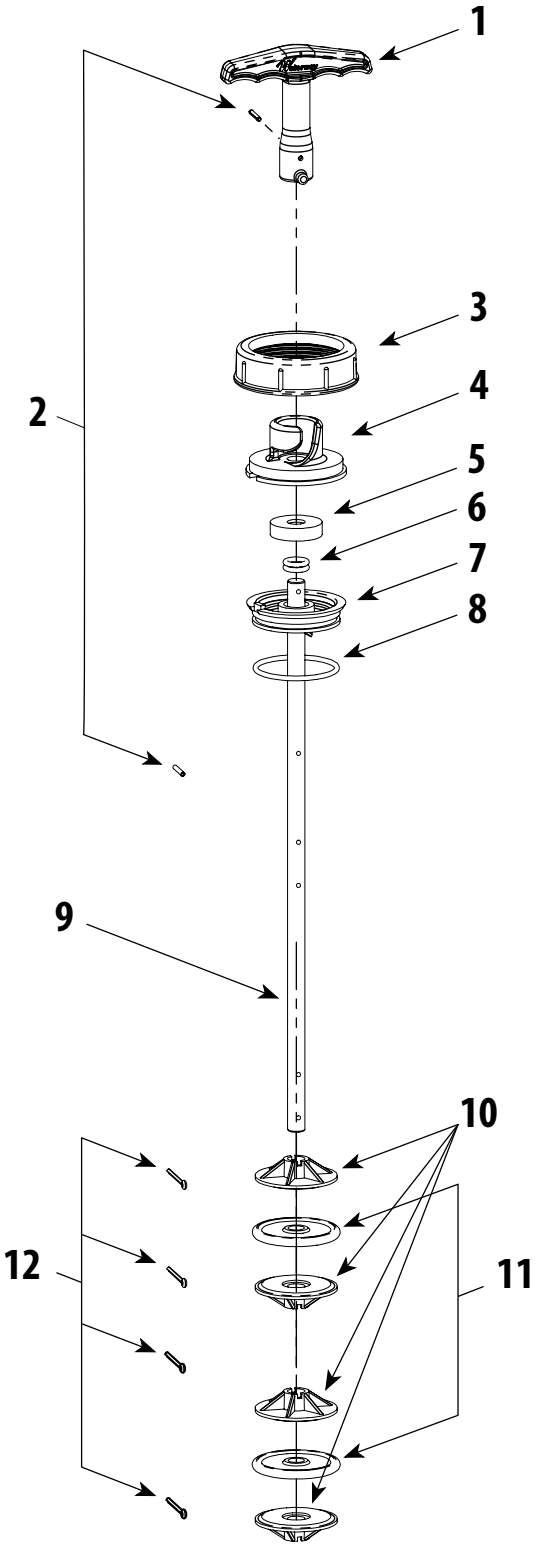
1
2
3
4
5
6
7
8
9
10
11
12

Slide Valve Internals Replacement Parts

Item	Part No.	Description	List (US $)
1	**505-1010B**	Handle	**
2	**802-0009B**	Split Pin - Qty. 2	7.25
3	**415-5091-CPVCB**	2" Nut	**
4	**505-1020B**	Indexing Cap	**
5	**505-1040B**	O-Ring Cap	**
6	**805-0206B**	New O-Ring	6.40
7	**505-1030B**	Washer	**
8	**805-0228B**	New O-Ring	6.40
9	**820-1050B**	Piston Rod	**
10	**505-1060B**	Piston O-Ring Housing - Qty. 4	**
11	**806-1000B**	Gasket O-Ring - Qty. 2	7.60
12	**802-1050B**	1/8" Cotter Pin, 1.5" Long - Qty. 4	2.24

** Please request price quote.

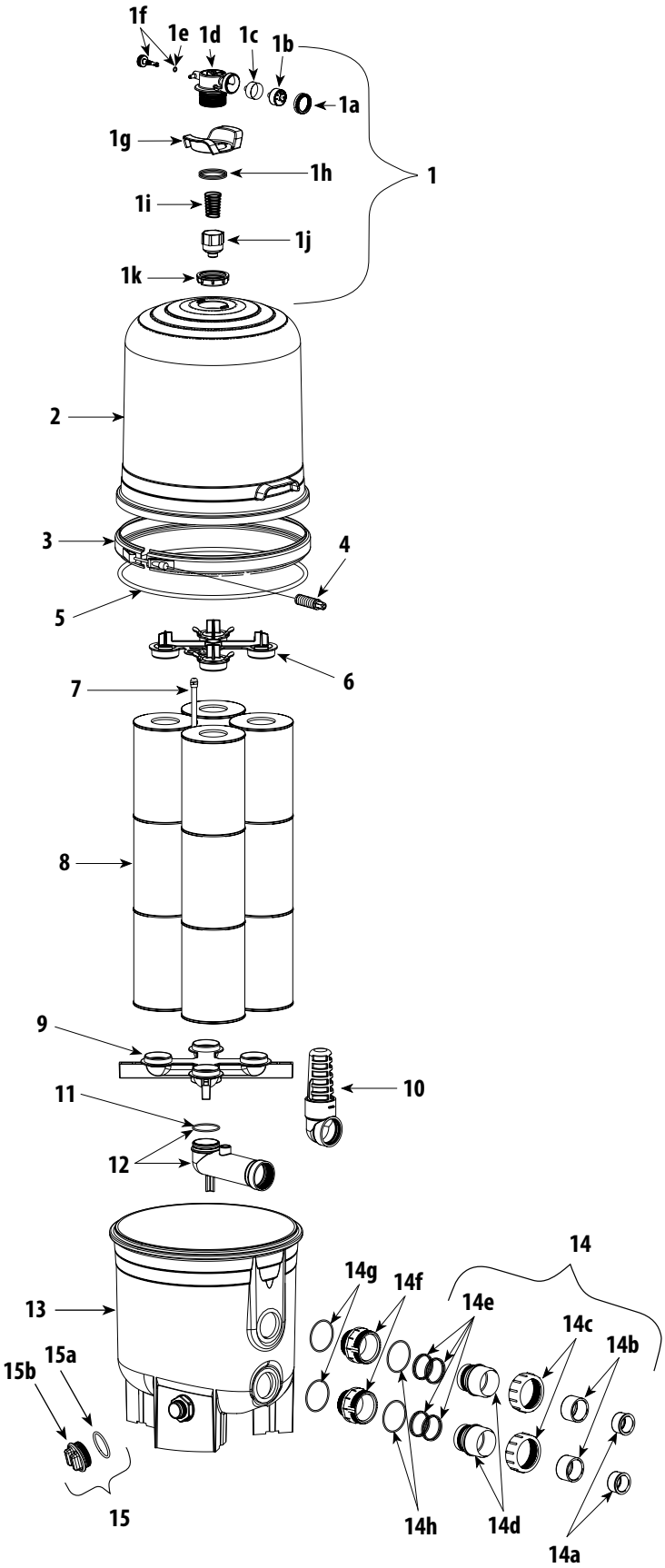
1f
1e
1d
1c
1b
1a
1g
1h
1
1i
1j
1k
2
3
4
5
6
7
8
9
10
11
12
13
14
14g
14f
14e
14c
14b
15a
15b
15
14h
14d
14a

Crystal Water Cartridge Filter Replacement Parts

Item	Part No.	Description	List (US $)
1	**550-4230B**	Pressure Relief Valve Assembly	103.96
1a	**600-4101B**	Bezel Assembly - Pressure Gauge	13.38
1b	**830-4000SSB**	Pressure Gauge	**
1c	**711-1670B**	Rubber Boot - Pressure Gauge	2.58
1d	**519-4281B**	Air Relief Valve Body	63.57
1e	**805-0110B**	O-Ring - ½" Air Control	3.29
1f	**550-4240B**	Pressure Relief Screw with O-Ring	6.37
1g	**602-4201B**	Handle - Air Relief Valve	33.11
1h	**805-0233B**	O-Ring - Handle (2 required)	**
1i	**827-8150B**	Spring - Water Bypass Valve	11.71
1j	**519-4370B**	Plunger	11.73
1k	**718-4201B**	Air Relief Valve Nut	7.96
2	**550-4460B**	Filter Lid with Cartridge Crystal Water Filter Labels - 325 sq. ft.	420.83
	550-4470B	Filter Lid with Cartridge Crystal Water Filter Labels - 425 sq. ft.	485.56
	550-4480B	Filter Lid with Cartridge Crystal Water Filter Labels - 525 sq. ft.	572.32
3	**550-4780B**	Metal Clamp with Clamp Spring Assembly	439.65
4	**550-4250B**	Clamp Spring Assembly	**
5	**805-0000B**	O-Ring - Main Body	28.43
6	**519-4320B**	Cartridge Manifold Plug	36.82
7	**550-4370B**	Air Relief Assembly with Tube - 325 sq. ft.	33.99
	550-4340B	Air Relief Assembly with Tube - 425 sq. ft.	45.86
	550-4330B	Air Relief Assembly with Tube - 525 sq. ft.	56.15
8	**817-0081B**	Cartridge - 325 sq. ft. - 7" OD x 20" L (4 required)	178.29
	817-0106B	Cartridge - 425 sq. ft. - 7" OD x 26 1/16" L (4 required)	198.11
	817-0131B	Cartridge - 525 sq. ft. - 7" OD x 32 1/16" L (4 required)	222.37
9	**550-4300B**	Cartridge Manifold Assembly	103.16
10	**550-4500B**	Intake Diffuser Assembly	54.51
11	**805-0230B**	O-Ring	0.77
12	**550-4360B**	Long Elbow with Venturi Air Bleeder and O-Ring	82.53
13	**550-4400B**	Filter Body with Labels	**
14	**400-9974B**	Fittings Pack - Fitting Nuts, O-Ring, 2 ½" to 2" Reducers	85.00
14a	**421-4071B**	Reducer - 1 ½" to 2"	3.36
14b	**421-4201B**	Reducer - 2 ½" to 2"	7.18
14c	**415-4211B**	2 ½" Union Nut (2 required)	**
14d	**417-2201B**	2 ½" Tailpiece with Piston O-Ring Groove (2 required)	8.01
14e	**805-0232B**	O-Ring - 2 ½" Union (4 required - 2 for each Bulkhead)	2.13
14f	**419-4201B**	2 ½" Bulkhead Coupler (2 required)	38.88
14g	**805-0339B**	O-Ring (2 required)	9.45
14h	**711-4200B**	2 ½" Beveled Gasket (2 required)	5.78
15	**400-6621B**	Drain Assembly *(New Style)*	3.05
15a	**805-0224B**	Drain O-Ring (224) *(New Style)*	1.41
15b	**715-6611B**	Drain Plug - 1 ½" MPT *(New Style)*	3.04
--	**500-5310B**	Drain Assembly (Plug, O-Rings, Base Fitting) *(Old Style 2 - not shown)*	**
--	**400-6601B**	Drain Plug with O-Ring *(Old Style 2 - not shown)*	2.87
--	**400-6610B**	Drain Elbow Assembly *(Old Style 1 - not shown)*	**

** Please request price quote.

Replacement Parts / **ClearWater II D.E. Filter**

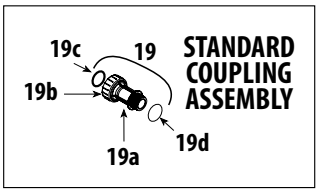

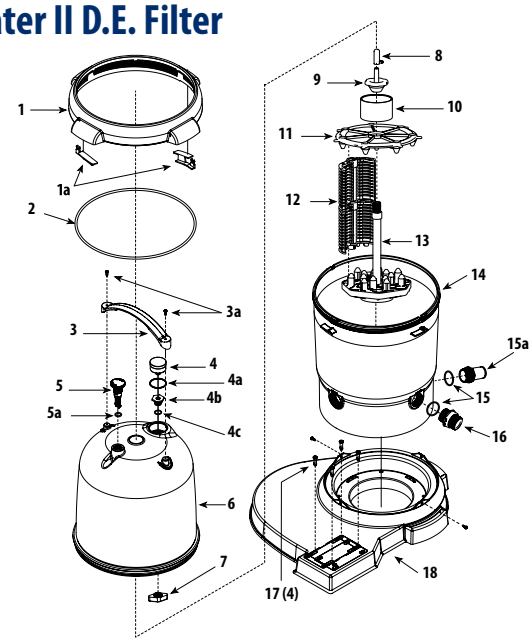

ClearWater II D.E. Filter Replacement Parts

Item	Part No.	Description	List (US $)
1	**550-7500B**	Filter Nut Assembly	101.16
1a	**519-7420B**	Lock Tab - Clearwater II Filter - Extended Arms	28.04
2	**805-0460B**	O-Ring - Lid	19.00
3	**519-7601B**	Handle - Lid	14.87
3a	**819-9002B**	Screw #12 x ¾" Stainless Steel Phillips Head	0.69
4	**830-4000SSB**	Pressure Gauge	**
4a	**805-0224B**	O-Ring - Gauge	1.41
4b	**519-7431B**	Pressure Gauge Adapter	5.22
4c	**805-0117SDB**	O-Ring - Pressure Gauge Adapter	**
5	**602-0201B**	Air Relief Knob	9.87
5a	**805-0207B**	O-Ring - Air Relief Valve	4.17
6	**519-7410B**	Lid Assembly *(Small)*	**
	519-7400B	Lid Assembly *(Large)*	**
7	**519-7441B**	Gauge Lock-Nut	17.96
8	**500-7310B**	Screen/Sock Assembly with Clamp	17.55
9	**718-7219B**	Tie Nut	12.28
10	**519-7491B**	Sleeve	6.45
11	**519-7269B**	Grid Locator	52.73
12	**550-7210B**	D.E. Replacement Grid (44 GPM) (set of 7 included)	255.05
	550-7220B	D.E. Replacement Grid (67 GPM) (set of 7 included)	327.85
13	**550-7100B**	Base Assembly – 12 sq. ft. (44 GPM)	115.45
	550-7120B	Base Assembly – 18 sq. ft. (67 GPM)	**
14	**515-7250B**	Filter Body	605.36
15	**805-0224B**	O-Ring	1.41
15a	**417-6241B**	Hose Adapter - 1 ½" MPT x 1 ½" hose	3.63
16	**500-5300B**	Drain Assembly	11.79
17	**429-7221B**	Snap Pin Base Fasteners (4 required)	3.13
18	**672-7401B**	ClearWater II Base	181.96
--	**519-7470B**	Lid Removal Tool	5.55
19	**419-7251**	Standard Base Coupling Assembly	20.47
19a	**419-7241**	Standard Coupling	15.58
19b	**415-5001**	2" Union Nut	3.89
19c	**711-4010**	2" Union Gasket	1.38
19d	**805-0224**	O-Ring - Couplng	0.62

** Please request price quote.

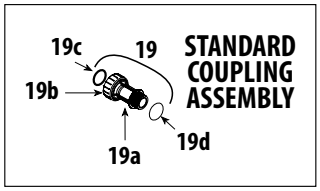

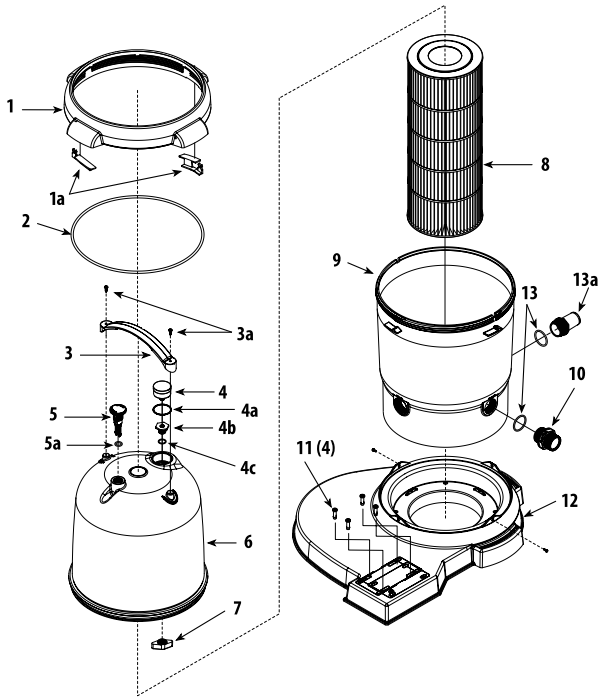

ClearWater II Cartridge Filter Replacement Parts

Item	Part No.	Description	List (US $)
1	**550-7500B**	Filter Locknut Assembly	101.16
1a	**519-7420B**	Lock Tab - Clearwater II Filter - Extended Arms	28.04
2	**805-0460B**	O-Ring - Lid	19.00
3	**519-7601B**	Handle - Lid	14.87
3a	**819-9002B**	Screw #12 x ¾" Stainless Steel Phillips Head	0.69
4	**830-4000SSB**	Pressure Gauge	**
4a	**805-0136B**	O-Ring - Air Relief	1.22
4b	**519-7431B**	Pressure Gauge Adapter	5.22
4c	**805-0116EPB**	O-Ring - Adapter	0.94
5	**602-0201B**	Air Relief Knob	9.87
5a	**805-0207B**	O-Ring - Air Relief Valve	4.17
6	**519-7410B**	Lid Assembly *(Small)*	**
	519-7400B	Lid Assembly *(Large)*	**
7	**519-7441B**	Gauge Lock-Nut	17.96
8	**817-0075PB**	Filter Cartridge - 75 sq. ft. - 8 15/16" OD x 17 3/8" L	194.07
	817-0100PB	Filter Cartridge - 100 sq. ft. - 8 15/16" OD x 17 3/8" L	231.00
	817-0125NB	Filter Cartridge - 125 sq. ft. - 8 15/16" OD x 23 5/16" L	245.63
	817-0150NB	Filter Cartridge - 150 sq. ft. - 8 15/16" OD x 23 5/16" L	330.55
	817-0200NB	Filter Cartridge - 200 sq. ft. - 8 15/16" OD x 23 5/16" L	**
9	**515-7250B**	Filter Body	605.36
10	**500-5300B**	Drain Assembly	11.79
11	**429-7221B**	Snap Pin Base Fasteners (4 required)	3.13
12	**672-7401B**	ClearWater II Base	181.96
13	**805-0224B**	O-Ring	1.41
13a	**417-6241B**	Hose Adapter - 1-1/2" MPT x 1-1/2" hose	3.63
--	**519-7470B**	Lid Removal Tool	5.55
19	**419-7251**	Standard Base Coupling Assembly	20.47
19a	**419-7241**	Standard Coupling	15.58
19b	**415-5001**	2" Union Nut	3.89
19c	**711-4010**	2" Union Gasket	1.38
19d	**805-0224**	O-Ring - Couplng	0.62

** Please request price quote.

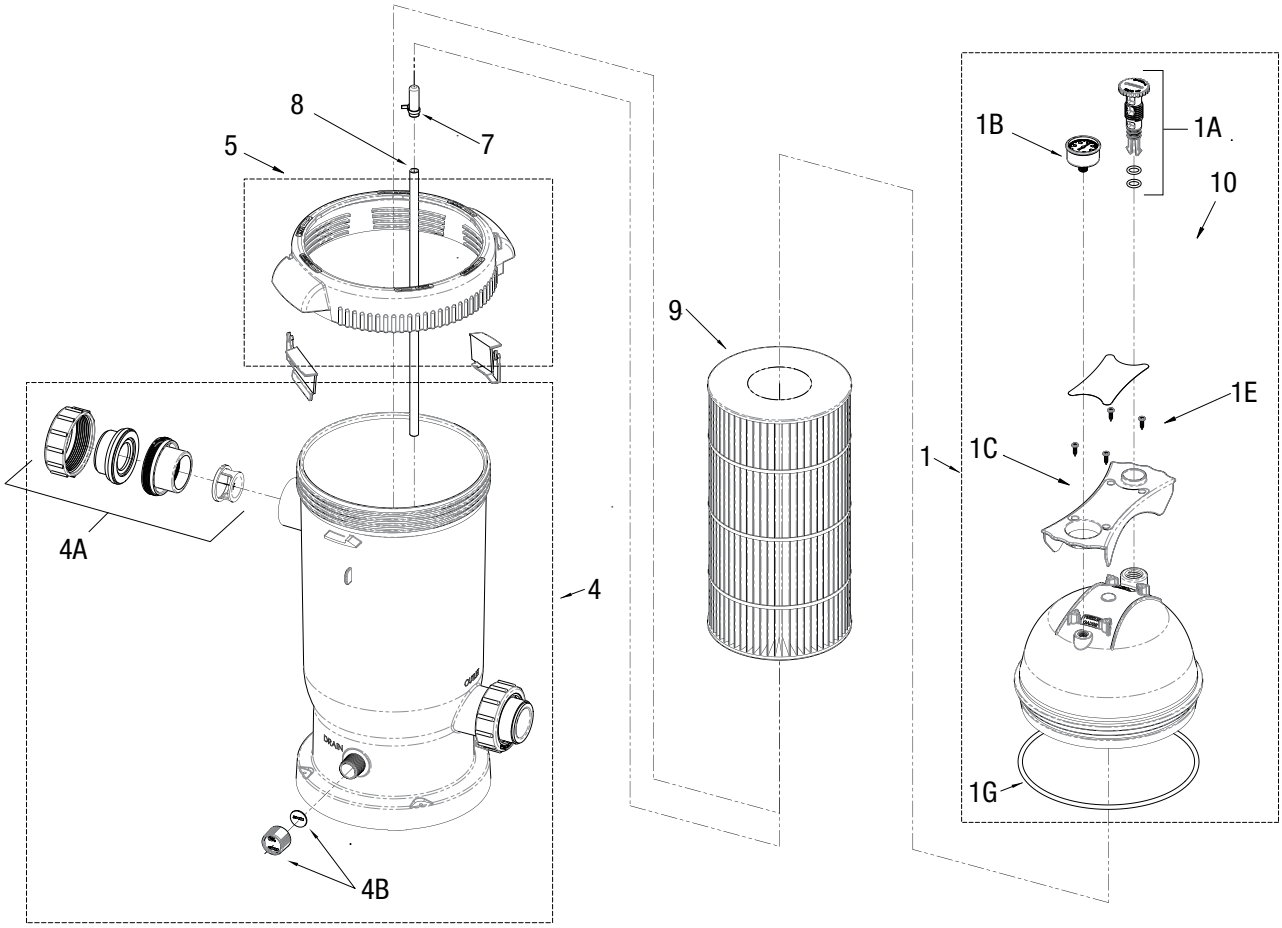

ProClean Plus Cartridge Filter Replacement Parts

Item	Part No.	Description	List (US $)
1	**550-0611**	Filter Lid & Handle Assembly – 75 - 100 sq. ft. (includes #1A - 1G)	271.24
	550-0621	Filter Lid & Handle Assembly – 125 - 150 sq. ft. (includes #1A - 1G)	298.00
	550-0631	Filter Lid & Handle Assembly – 175 - 200 sq. ft. (includes #1A - 1G)	328.31
1a	**600-0220**	ProClean Plus Air Relief Valve w/ O-Ring	7.56
4	**550-0601B**	Filter Body & Lock ring Assy (includes #4A-4B)	545.53
4a	**400-5961-2B**	2 ½" Union with 2" S TP with Gasket & Reducer for ProClean	30.51
4b	**550-0260**	ProClean Plus Drain Cap with Gasket Assembly	5.14
5	**550-0701B**	Lock Ring Assembly	114.75
7	**500-7310B**	Screen/Sock with Clamp Assy	17.55
8	**872-4000EB**	Air Bleed Tube - 75 / 100 sq. ft.	6.76
	872-4000LB	Air Bleed Tube - 125 / 150 sq. ft.	12.78
	872-4000FB	Air Bleed Tube - 175 / 200 sq. ft.	10.15
9	**817-0075NB**	Filter Cartridge - 75 sq. ft.	**
	817-0100NB	Filter Cartridge - 100 sq. ft.	**
	817-0125NB	Filter Cartridge - 125 sq. ft.	245.63
	817-0150NB	Filter Cartridge - 150 sq. ft.	330.55
	817-0175NB	Filter Cartridge - 175 sq. ft.	**
	817-0200NB	Filter Cartridge - 200 sq. ft.	**

** Please request price quote.

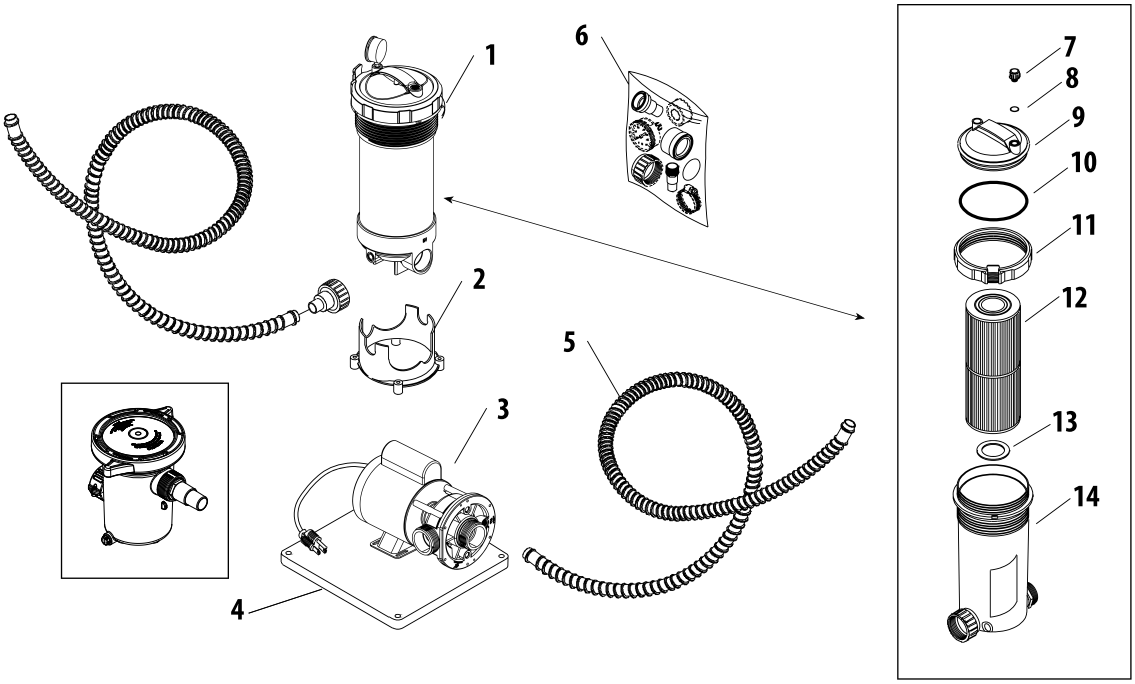

TWM Filter Package Replacement Parts

Item	Part No.	Description	List (US $)
1	**500-2515B**	Top Load Filter with Union - 25 sq. ft.	221.70
	500-5015B	Top Load Filter with Union - 50 sq. ft.	241.57
2	**672-1051B**	Filter Mount Base	15.80
3	**--**	Pump *(see Center Discharge Pumps, page 21)*	**
4	**672-1010B**	Base - 1" x 14 ½" x 15"	36.75
5	**872-9002B**	Corrugated Hose - 1 ½" x 6 ft.	20.98
6	**400-9900B**	Fitting Package *(see below for package contents)*	173.45
7	**715-1001B**	Air Relief Plug	3.99
8	**805-0114B**	O-Ring - Air Relief Plug	1.40
9	**550-5100DB**	Top Load Filter Lid Assembly with Plugs and O-Rings	36.20
10	**805-0360B**	O-Ring - Top Load Filter Lid	7.58
11	**500-1000B**	Lock Ring Assembly	19.52
12	**817-5000B**	Top Load Filter Cartridge - 50 sq. ft. - 4 15/16" OD x 13 5/16" L	103.03
	817-2500B	Top Load Filter Cartridge - 25 sq. ft. - 4 15/16" OD x 13 5/16" L	60.22
13	**711-1010B**	Spacer Ring	3.96
14	**550-2515B**	Filter Body Assembly - 25 & 50 sq. ft.	202.04
15	**310-5400B**	6" Leaf Trap 1 ½" x 1 ½"	95.15

Fittings Package Contents (Item 6)

Item	Part No.	Description	List (US $)
--	**830-3000B**	Pressure Gauge	25.97
--	**872-0011B**	2 ½" Hose Clamp (4 required)	**
--	**902-2000B**	Teflon Tape - ½" x 260" roll	6.30
--	**417-4001B**	Tailpiece - 1 ½" S	3.57
--	**417-6041B**	Hose Adapter Fitting - 1 ½" TP - 1 ½" x 1 ¼" H	2.80
--	**415-4001B**	1 ½" Union Nut	2.62
--	**805-0226B**	O-Ring (2 required)	0.76
--	**417-6061B**	Hose Adapter Fitting - 1 ½" MPT x 1 ¼" Hose	3.17

** Please request price quote.

SIDE MOUNT

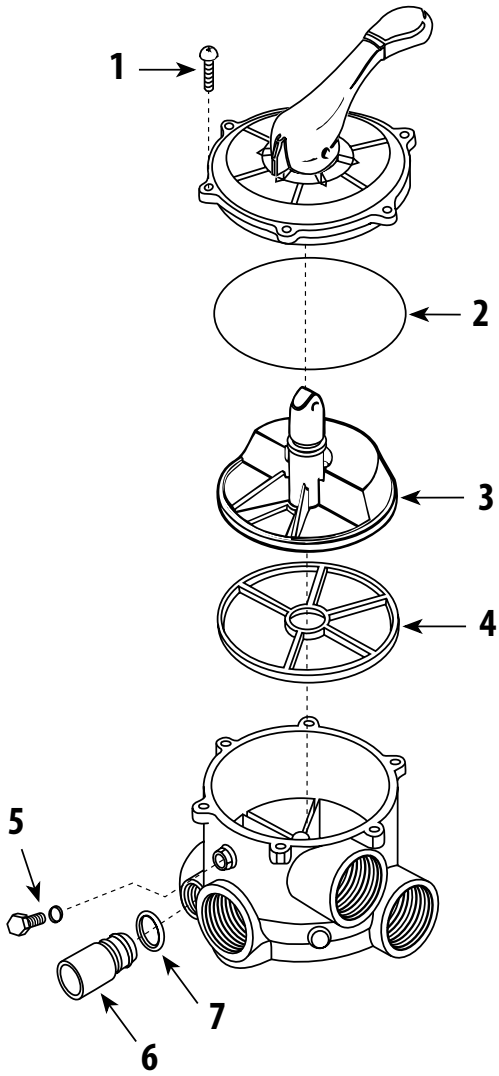

TOP MOUNT

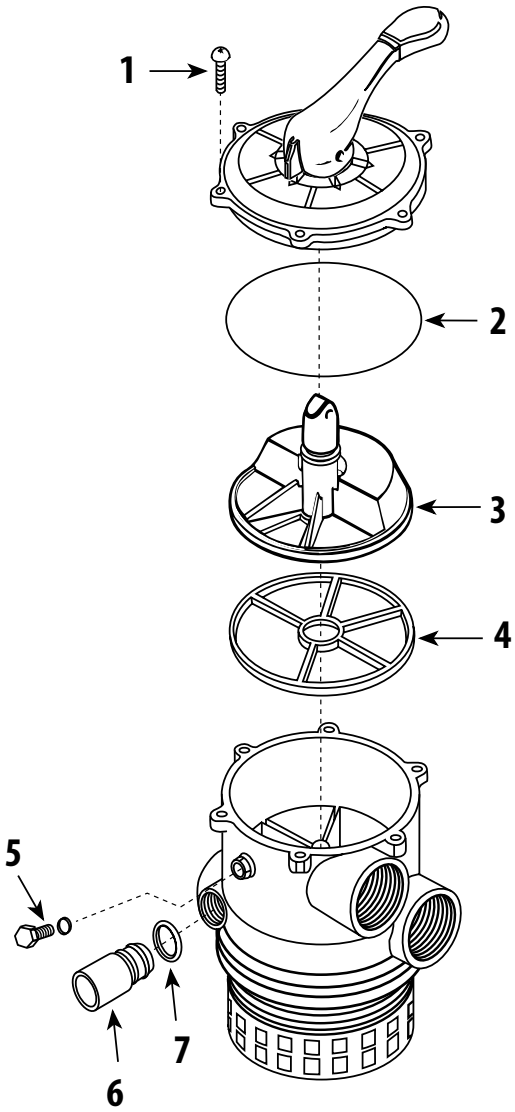

SmartClean Sand and Crystal Water D.E. Multi-Port Valve Replacement Parts

Item	Part No.	Description	Valve Size	List (US $)
1	**819-0010B**	Screw	1 ½" and 2"	2.66
2	**873-E7S2B**	O-Ring - Cover	1 ½"	**
	805-0254B	O-Ring - Cover	2"	10.53
3	**602-1910B**	Diverter (Noryl)	1 ½"	**
	873-E1011S2B	Diverter (Noryl)	2"	**
4	**873-E12S1B**	Spider Gasket (T.P.E.)	1 ½"	27.48
	873-E12S2B	Spider Gasket (T.P.E.)	2"	**
5	**873-E15S1B**	¼" Plug	1 ½" and 2"	**
6	**873-E17S1B**	Sight Glass (Lexan)	1 ½" and 2"	**
7	**873-E16S1B**	Sight Glass Gasket	1 ½" and 2"	**

** Please request price quote.

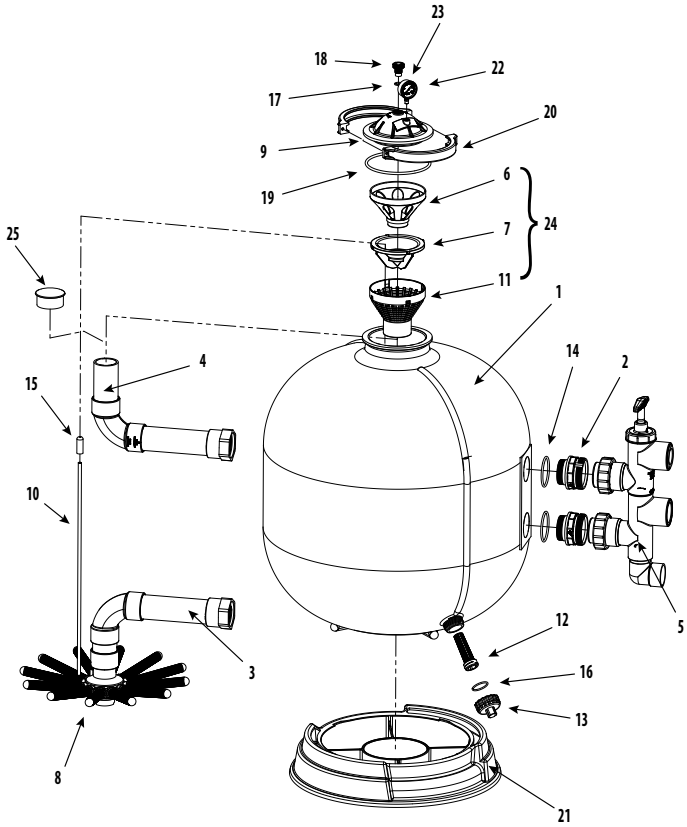

UltraClean Pro Sand Filter Replacement Parts

Item	Part No.	Description	List (US $)
1	**515-2041TB**	26" Sand Filter Body	**
2	**419-4201B**	2 ½" Threaded Coupler (2 required)	38.88
3	**550-5410B**	2 ½" Outlet Assembly	**
4	**550-5420B**	2 ½" Inlet Assembly	**
5	**600-1500UCPB**	2 ½" Slide Valve Assembly	**
6	**519-5310B**	Sand Fill Guide	**
7	**519-5320B**	Diffuser Disbursement Basket Cap	**
8	**519-5370B**	Twist-Lock Lateral (12 required)	9.09
9	**519-5301B**	Access Dome Cover	**
10	**872-2130DB**	Tubing - ⅜" outer diameter x 32" height	**
11	**519-5330SCB**	Diffuser Disbursement Basket	**
12	**602-5310B**	Self-Threading Drain Screen	6.17
13	**602-5301B**	Drain Screen Cap (2010 and earlier)	5.68
	602-5321B	Drain Screen Cap (new style - 2011)	5.68
14	**805-0339BN50B**	O-Ring (2 required)	**
15	**817-0001B**	2" Polyester Sock	12.26
16	**805-0224B**	O-Ring - Drain Screen Cap	1.41
17	**805-0116EPB**	O-Ring	0.94
18	**715-6011B**	Air Bleeder Plug	9.13
19	**805-0442B**	O-Ring - Access Dome Cover	11.32
20	**872-0046B**	Multi-Port Valve Clamp Kit with Nuts & Bolts	23.47
21	**672-5301B**	Filter Base	83.74
22	**830-3000B**	Pressure Gauge	25.97
23	**600-4101B**	Bezel Cover Assembly	13.38
24	**550-5430B**	Basket Assembly	**
25	**519-5421B**	Sand Fill Cap	**

** Please request price quote.

Notes

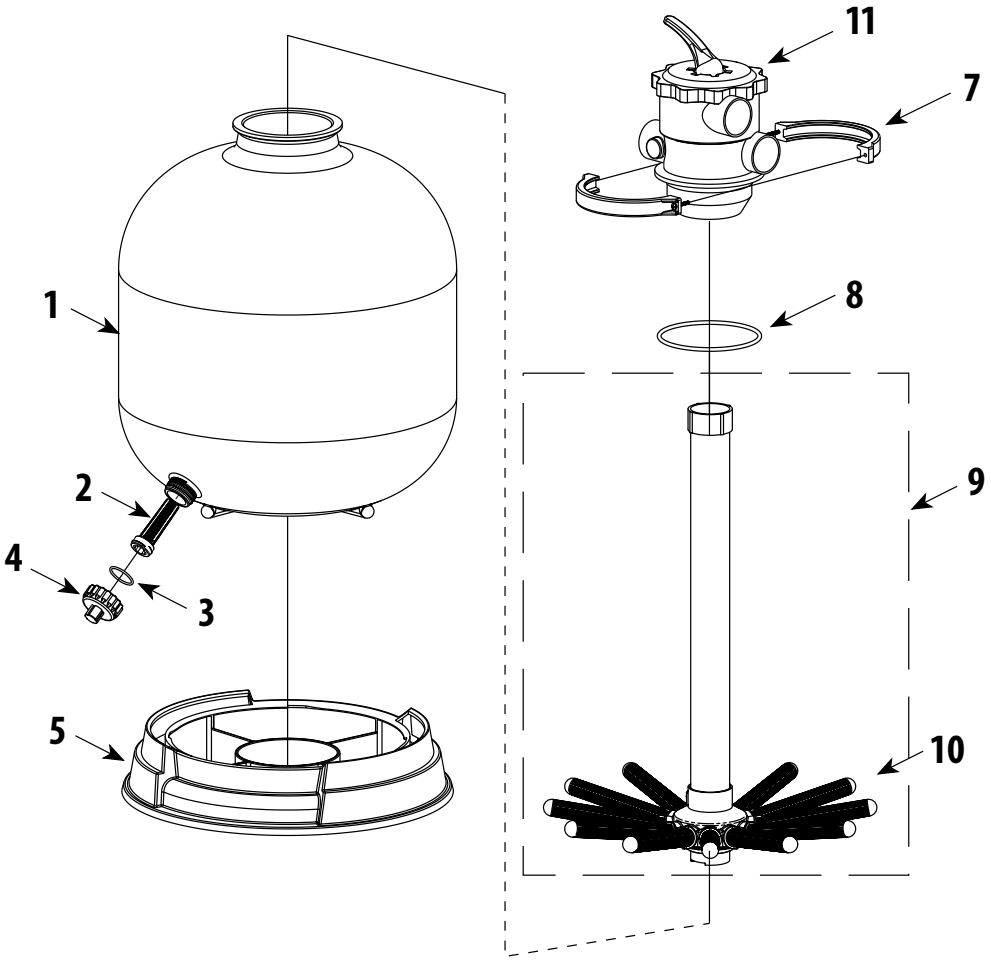

SmartClean Sand Filter -Top Mount Replacement Parts			
Item	Part No.	Description	List (US $)
1	**515-2041TB**	26" SmartClean Sand Filter Body	**
2	**602-5310B**	Self-Threading Drain Screen	6.17
3	**711-5310B**	Drain Cap Gasket	**
4	**602-5301B**	Drain Screen Cap (2010 and earlier)	5.68
	602-5321B	Drain Screen Cap (new style - 2011)	5.68
5	**672-5301B**	SmartClean Sand Filter Base	83.74
7	**872-0046B**	Multi-Port Valve Clamp Kit with Nuts & Bolts	23.47
8	**805-0442B**	O-Ring - Multi-Port Valve	11.32
9	**550-5340B**	Top Mount Lateral and Manifold Assembly - 26"	**
	550-5370B	Top Mount Lateral and Manifold Assembly - 32"	**
10	**519-5370B**	Lateral	9.09
11	**WVS004B**	Top Mount Clamp Style - 2" FPT	**

** Please request price quote.

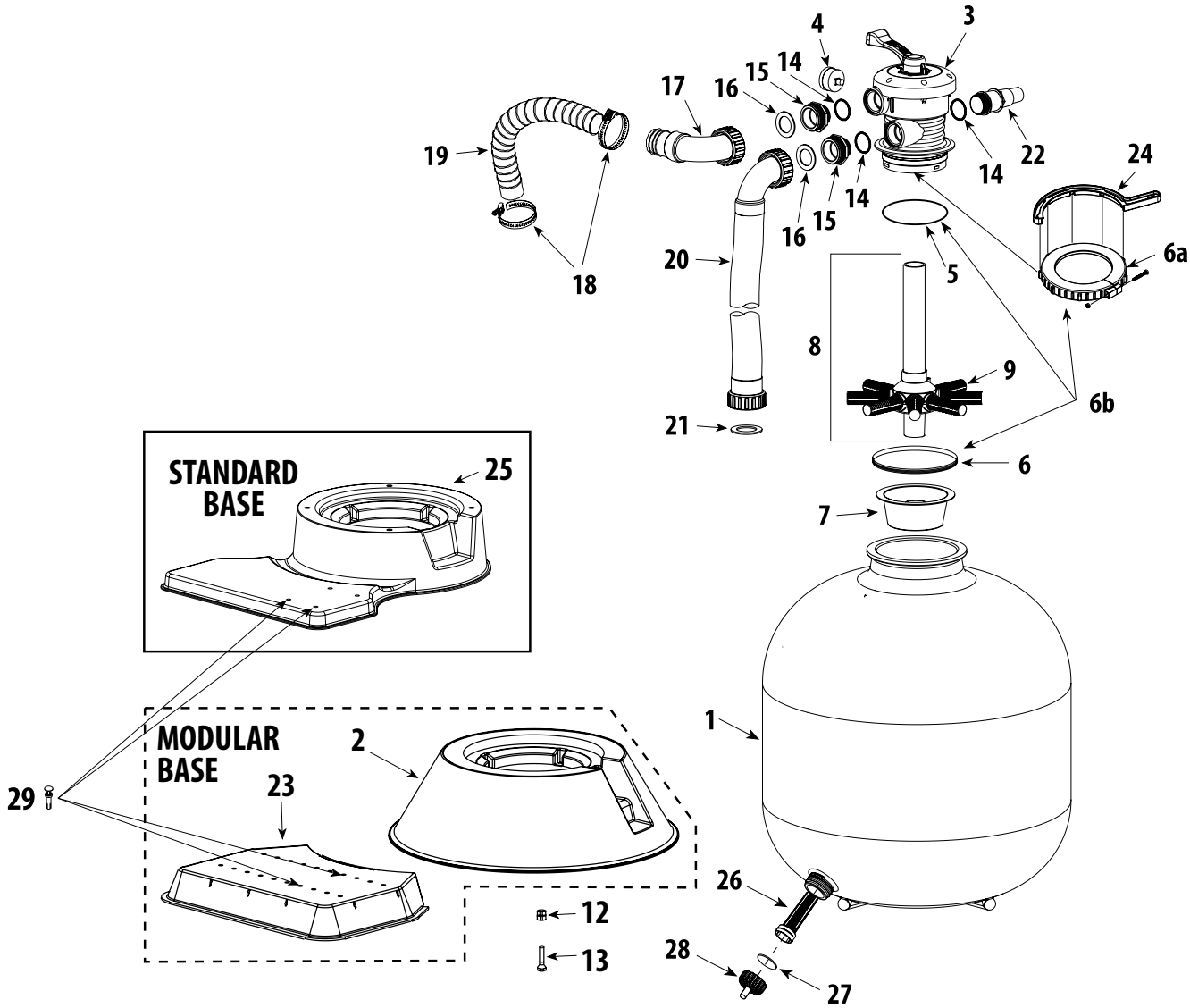

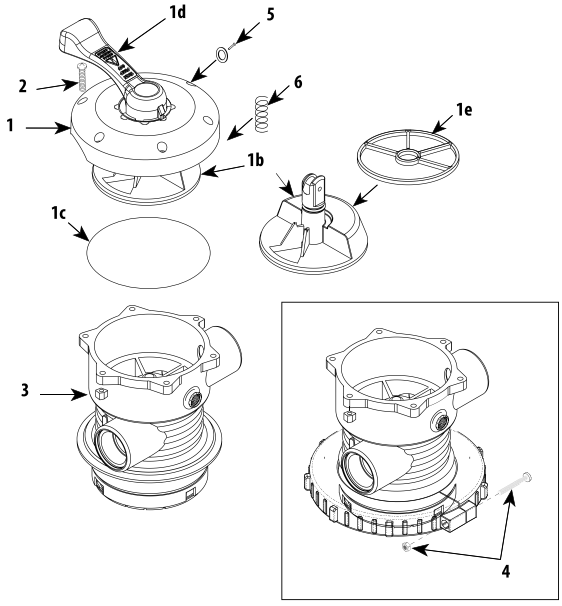

Multi-Port Valve Assembly

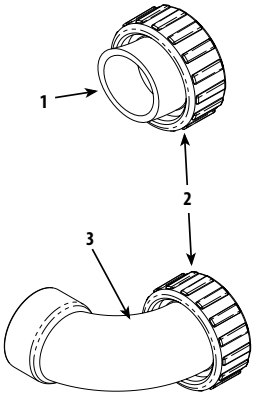

Hard Pump Options

Carefree Sand Filter Replacement Parts

Item	Part No.	Description	List (US $)
1	**505-0271B**	16" Oval Sand Filter Body with Threaded Sleeve Assembly	349.24
	505-0281B	19" Oval Sand Filter Body with Threaded Sleeve Assembly	422.04
	505-0291B	22" Oval Sand Filter Body with Threaded Sleeve Assembly	491.56
	505-0301B	26" Oval Sand Filter Body with Threaded Sleeve Assembly	655.88
2	**672-7211B**	Modular Filter Base	84.04
3	**WVS003B**	1 ½" Multi-Port Valve Assembly - Split-Nut	177.99
4	**830-3000B**	Pressure Gauge	25.97
5	**805-0435B**	O-Ring - Multi-Port Valve	8.98
6	**505-3000B**	Threaded Sleeve Assembly	21.58
6a	**505-3010B**	Split-Nut Assembly - Multi-Port Valve	23.74
6b	**505-3020B**	Split-Nut Assembly - Multi-Port Valve with Thread Sleeve and O-Ring	45.92
7	**502-2011B**	Sand Fill Guide	7.94
8	**505-2140B**	Lateral and Manifold Assembly - 16" Filter	87.53
	505-2150B	Lateral and Manifold Assembly - 19" Filter	87.53
	505-2160B	Lateral and Manifold Assembly - 22" Filter	87.31
	505-2180B	Lateral and Manifold Assembly - 26" Filter	90.33
9	**505-1930B**	Lateral - Thread Style *(8 required)*	7.75
	519-5370B	Lateral - 22" and 26" Sand Filter *(12 required)*	9.09
10	**505-2020B**	Drain Assembly (2004 and earlier)	17.17
11	**505-2030B**	Drain Cap Assembly (2004 and earlier)	8.33
12	**820-0017B**	⅜" Flat Washer	1.06
13	**819-0016B**	⅜" Bolt -16 x 2" Hex - 22"& 26" Sand Filter	2.91
	819-0019B	⅜" Bolt -16 x 1 ½" Hex - 19" Sand Filter	4.00
	819-0020B	⅜" Bolt-16 x 1 ¼" Hex - 16" Sand Filter	4.67
14	**805-0224B**	O-Ring - 1 ½" Buttress x 1 ½" MPT Fitting	1.41
15	**417-4161B**	1 ½" Buttress x 1 ½" MPT Tailpiece	6.19
16	**711-4000B**	1 ½" Union Gasket	1.41
17	**550-1841B**	Return Sweep Assembly	33.80
18	**872-0011B**	Hose Clamp - Stainless Steel - 2 ½"	**
19	**872-9002B**	Corrugated Hose - Black - 1 ½" x 6 ft.	20.98
20	**550-1821B**	PVC Flex Hose Assembly - 19" Sand Filter	78.35
	550-1831B	PVC Flex Hose Assembly - 22" Sand Filter	81.58
	550-1833B	PVC Flex Hose Assembly - 26" Sand Filter	89.85
21	**711-4010B**	2" Union Gasket	1.52
22	**425-1928B**	Waste Adapter Fitting	17.00
23	**672-7201B**	Pump Base	43.27
24	**505-1970B**	Collar Wrench for Threaded Style Split-Nut	18.79
25	**672-7241B**	Standard One-Piece Base	96.00
26	**602-5310B**	Self-Threading Drain Screen	6.17
27	**805-0224B**	O-Ring - 1 ½" Heater Tailpiece	1.41
28	**602-5301B**	Drain Screen Cap (2010 and earlier)	5.68
	602-5321B	Drain Screen Cap (new style - 2001)	5.68
29	**429-7300B**	Replacement Kit Pin and Anchor Assembly (4 required)	9.23

Multi-Port Valve Assembly Replacement Parts

1	**600-9600B**	Multi-Port Lid Assembly	119.32
1b	**600-9500B**	Diverter Valve Assembly with Gasket	45.89
1c	**805-0254B**	O-Ring - Lid	10.53
1d	**602-1931B**	Lid Handle Only	12.58
1e	**711-1910B**	Diverter Gasket (Spider) *(Note: purchasing gasket glued into diverter by factory recommended)*	20.19
2	**819-0010B**	Screw - Lid	2.66
3	**820-0013B**	Serrated Hex Nut	**
4	**800-0100B**	1 ½" Split-Nut Bolt & Nut Kit	5.36
5	**800-0150B**	O-Ring Kit with Pin & Washer	15.10
6	**827-0002B**	Spring	8.74

Hard Pump Options

1	**400-4061B**	1 ½" Socket Pump Union Assembly	6.72
2	**415-4001B**	1 ½" Union Nut	2.62
3	**500-1901B**	1 ½" Socket Return Sweep Assembly	31.01

** Please request price quote.

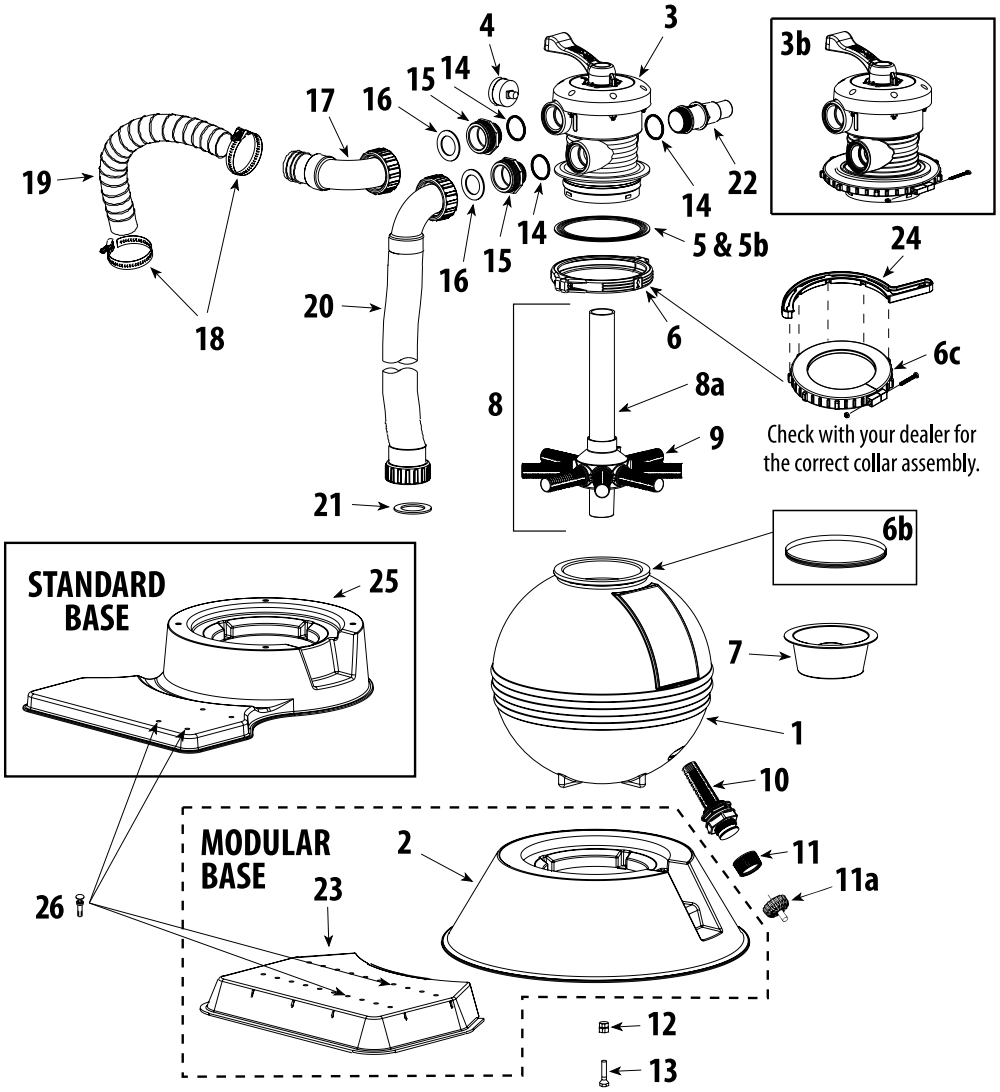

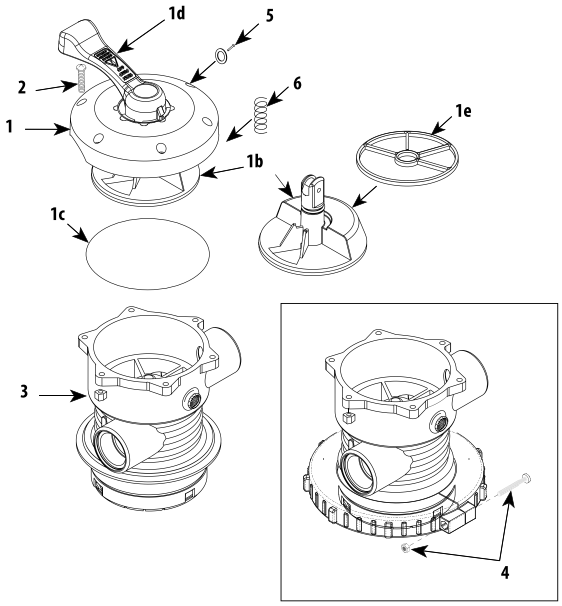

Multi-Port Valve Assembly

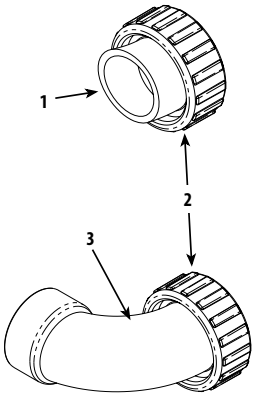

Hard Pump Options

ClearWater Sand Filter Replacement Parts

Item	Part No.	Description	List (US $)
1	**505-0161B**	16" Sand Filter Body with Threaded Sleeve Assembly	309.89
	505-0191B	19" Sand Filter Body with Threaded Sleeve Assembly	370.90
	505-0221B	22" Sand Filter Body with Threaded Sleeve Assembly	408.09
	505-0261B	26" Sand Filter Body with Threaded Sleeve Assembly	556.32
2	**672-7211B**	Modular Filter Base	84.04
3	**WVS002B**	Multi-Port Valve Assembly - Clamp Style *(2001 and Earlier)*	177.99
3b	**WVS003B**	Multi-Port Valve Assembly - Split-Nut Style *(2002 to Present)*	177.99
4	**830-3000B**	Pressure Gauge	25.97
5	**711-1920B**	Collar Gasket *(for Clamp Style) (2001 and Earlier)*	14.11
5b	**805-0435B**	O-Ring - Multi-Port Valve *(for Split-Nut Style)*	8.98
6	**505-2070B**	Collar Assembly - Clamp Style *(2001 and Earlier)*	47.06
6b	**505-3000B**	Threaded Sleeve Assembly *(2002 to Present)*	21.58
6c	**505-3010B**	Split-Nut Assembly *(included with WVS003)*	23.74
7	**502-2011B**	Sand Fill Guide	7.94
8	**505-2040B**	Lateral and Manifold Assembly - 16" Filter	87.75
	505-2050B	Lateral and Manifold Assembly - 19" Filter	87.42
	505-2060B	Lateral and Manifold Assembly - 22" Filter	87.42
	505-2080B	Lateral and Manifold Assembly - 26" Filter	87.53
8a	**505-2240-RB**	Manifold Only - 16" Filter	**
	505-2250-RB	Manifold Only - 19" Filter	**
	505-2260-RB	Manifold Only - 22" Filter	**
9	**505-1930B**	Lateral - Thread Style *(2003 and Earlier)*	7.75
	505-1950B	Lateral - Twist-Lock Style *(2004)*	7.17
10	**505-2020B**	Drain Assembly (2004 and earlier)	17.17
11	**505-2030B**	Drain Cap Assembly (2004 and earlier)	8.33
11a	**602-5321B**	Drain Screen Cap (new style - 2001)	5.68
12	**820-0017B**	⅜" Flat Washer	1.06
13	**819-0016B**	⅜" Bolt -16 x 2" Hex - 22" & 26" Sand Filter	2.91
	819-0019B	⅜" Bolt -16 x 1 ½" Hex - 19" Sand Filter	4.00
	819-0020B	⅜" Bolt -16 x 1 ¼" Hex - 16" Sand Filter	4.67
14	**805-0224B**	O-Ring - 1 ½" Buttress x 1 ½" MPT Fitting	1.41
15	**417-4161B**	1 ½" Buttress x 1 ½" MPT Tailpiece	6.19
16	**711-4000B**	1 ½" Union Gasket	1.41
17	**550-1841B**	Return Sweep Assembly	33.8
18	**872-0011B**	Hose Clamp - Stainless Steel	**
19	**872-9002B**	Corrugated Hose - Black - 1 ½" x 6 ft.	20.98
20	**550-1801B**	PVC Flex Hose Assembly - 16" Sand Filter	51.31
	550-1811B	PVC Flex Hose Assembly - 19" Sand Filter	68.26
	550-1821B	PVC Flex Hose Assembly - 22" Sand Filter	78.35
	550-1831B	PVC Flex Hose Assembly - 26" Sand Filter	81.58
21	**711-4010B**	2" Union Gasket	1.52
22	**425-1928B**	Waste Adapter Fitting	17.00
23	**672-7201B**	Pump Base	43.27
24	**505-1970B**	Collar Wrench for Split-Nut Threaded Style	18.79
25	**672-7241B**	Standard One-Piece Base	96.00
26	**429-7300B**	Replacement Kit Pin and Anchor Assembly (4 required)	9.23

Multi-Port Valve Assembly Replacement Parts

1	**600-9600B**	Multi-Port Lid Assembly	119.32
1b	**600-9500B**	Diverter Valve Assembly with Gasket	45.89
1c	**805-0254B**	O-Ring - Lid	10.53
1d	**602-1931B**	Lid Handle Only	12.58
1e	**711-1910B**	Diverter Gasket (Spider) *(Note: purchasing gasket glued into diverter by factory recommended)*	20.19
2	**819-0010B**	Lid Screw	2.66
3	**820-0013B**	Serrated Hex Nut	**
4	**800-0100B**	Split-Nut Bolt and Nut Kit	5.36
5	**800-0150B**	O-Ring Kit with Pin and Washer	15.10
6	**827-0002B**	Spring	8.74

Hard Pump Options

1	**400-4061B**	1 ½" Socket Pump Union Assembly	6.72
2	**415-4001B**	1 ½" Union Nut	2.62
3	**500-1901B**	1 ½" Socket Return Sweep Assembly	31.01

** Please request price quote.

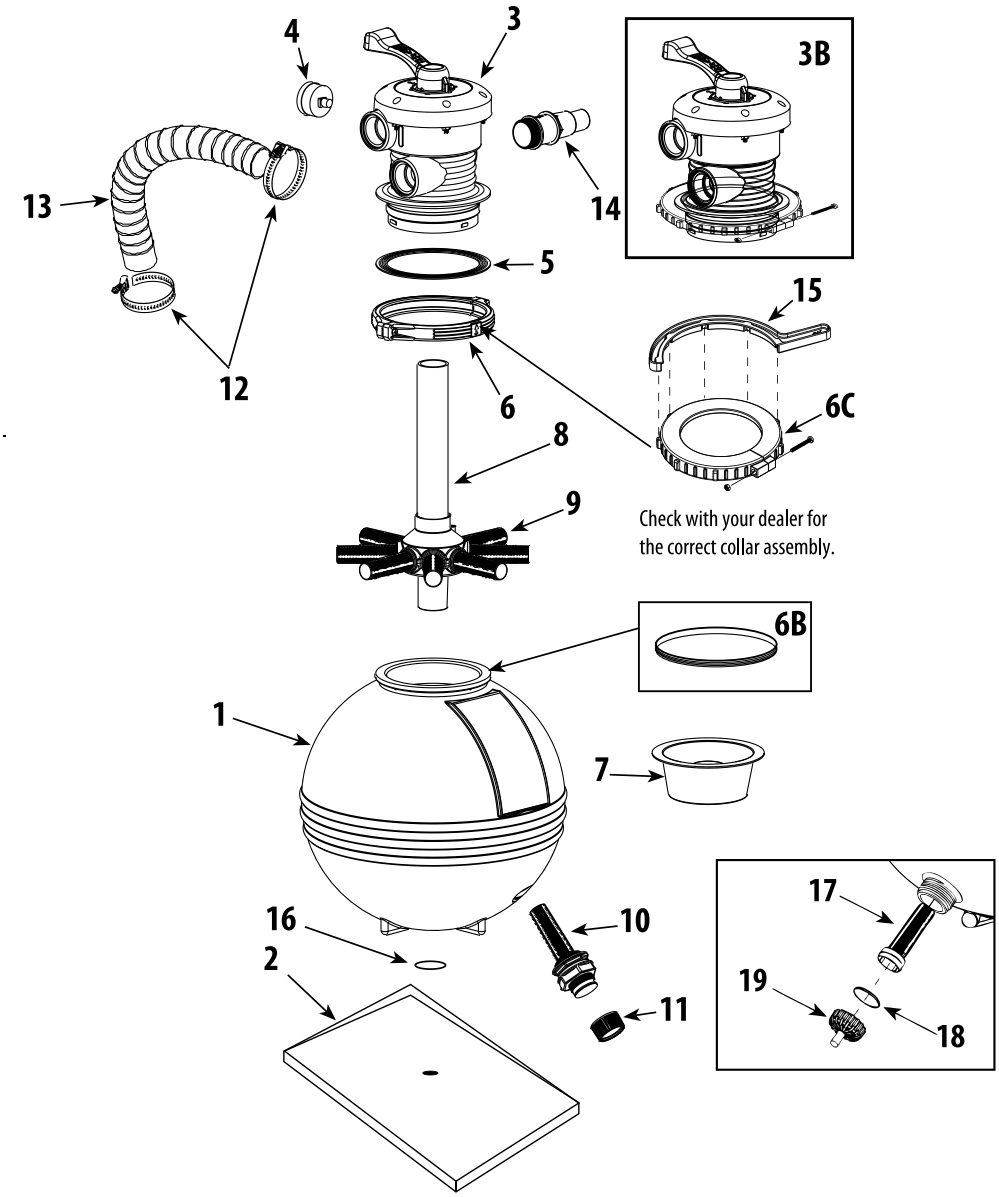

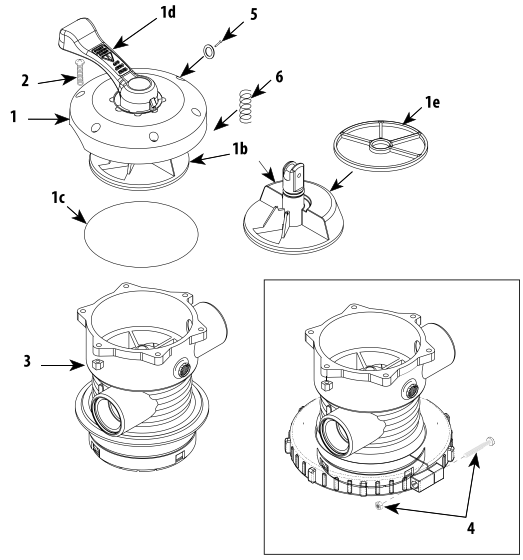

Multi-Port Valve Assembly

TWM Sand Filter Replacement Parts

Item	Part No.	Description	List (US $)
1	**505-0161B**	16" Sand Filter Body with Threaded Sleeve Assembly	309.89
	505-0191B	19" Sand Filter Body with Threaded Sleeve Assembly	370.90
	505-0221B	22" Sand Filter Body with Threaded Sleeve Assembly	408.09
	505-0261B	26" Sand Filter Body with Threaded Sleeve Assembly	556.32
2	**672-1000B**	Equipment Base - 1" x 15 ¼" x 26 ¼"	43.94
3	**WVS002B**	1 ½" Multi-Port Valve Assembly - Clamp Style (2001 and Earlier)	177.99
3B	**WVS003B**	1 ½" Multi-Port Valve Assembly with Split-Nut (2002 to Present)	177.99
4	**830-3000B**	Pressure Gauge	25.97
5	**711-1920B**	Collar Gasket *(use with Clamp Style)*	14.11
6	**505-2070B**	Collar Assembly - Old Style *(2001 and Earlier)*	47.06
6B	**505-3000B**	Threaded Sleeve Assembly	21.58
6C	**505-3010B**	Multi-Port Valve Split-Nut Assembly	23.74
7	**502-2011B**	Sand Fill Guide	7.94
8	**505-2040B**	Lateral & Manifold Assembly - 16" Filter	87.75
	505-2050B	Lateral & Manifold Assembly - 19" Filter	87.42
	505-2060B	Lateral & Manifold Assembly - 22" Filter	87.42
	505-2080B	Lateral & Manifold Assembly - 26" Filter	87.53
9	**505-1930B**	Lateral - Threaded Style *(2001 and Earlier)*	7.75
	505-1950B	Lateral - Twist-Lock Style *(2003 to Present)*	7.17
10	**505-2020B**	Drain Assembly 2004 and earlier	17.17
11	**505-2030B**	Drain Cap Assembly 2004 and earlier	8.33
12	**872-0011B**	Hose Clamp - Stainless Steel - 2 ½"	**
13	**872-9002B**	Corrugated Hose - Black - 1 ½" x 6 ft. (2 required)	20.98
	872-9001B	Corrugated Hose - Black - 1 ½" x 3 ft. (1 required)	16.22
14	**425-1928B**	Waste Adapter Fitting	17.00
15	**505-1970B**	Collar Wrench for Split-Nut Threaded Style (optional)	18.79
16	**218-6680B**	Washer	3.04
17	**602-5310B**	Self Threading Drain Screen	6.17
18	**805-0224B**	O-Ring - 1 ½" Heater Tailpiece	1.41
19	**602-5321B**	Drain Screen Cap (new style - 2001)	5.68

Multi-Port Valve Assembly Replacement Parts

Item	Part No.	Description	List (US $)
1	**600-9600B**	Multi-Port Lid Assembly	119.32
1b	**600-9500B**	Diverter Valve Assembly	45.89
1c	**805-0254B**	O-Ring - Lid	10.53
1d	**602-1931B**	Lid Handle Only	12.58
1e	**711-1910B**	Diverter Gasket (Spider) *(Note: purchasing gasket glued into diverter by factory recommended)*	20.19
2	**819-0010B**	Lid Screw	2.66
3	**820-0013B**	Serrated Hex Nut	**
4	**800-0100B**	1 ½" Split-Nut Bolt and Nut Kit	5.36
5	**800-0150B**	O-Ring Kit with Pin and Washer	15.10
6	**827-0002B**	Spring	8.74

** Please request price quote.

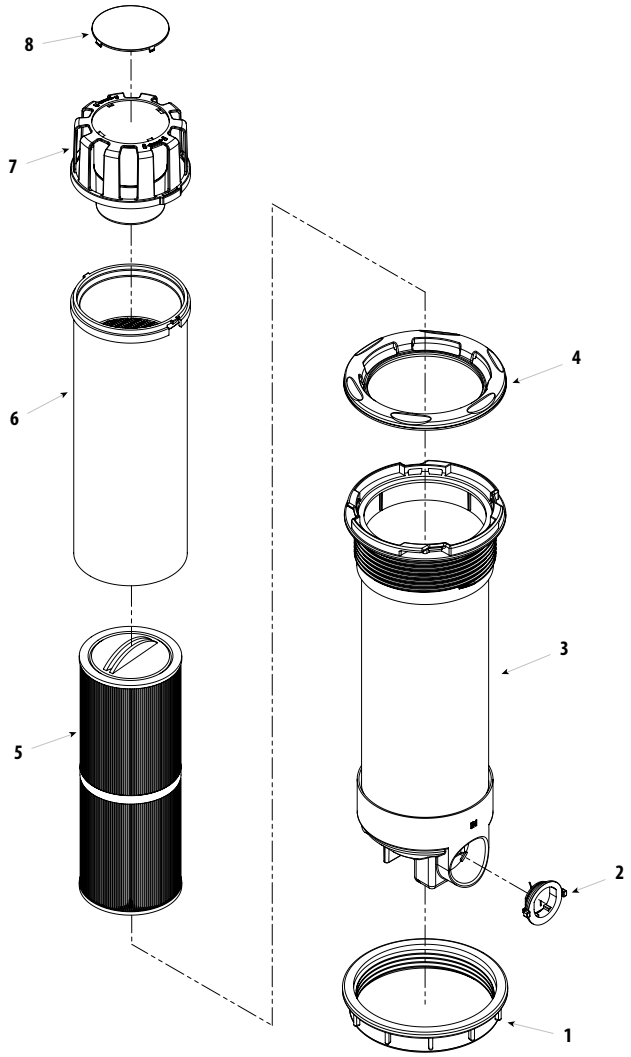

Teleweir			
Item	Part No.	Description	List (US $)
1	**718-1000B**	Top-Mount Filter Nut	15.84
2	**600-1040B**	2" Bypass Valve	10.38
3	**550-5735-1B**	35 sq. ft. Teleweir Body Assembly	**
	550-5750-1B	50 sq. ft. Teleweir Body Assembly	**
	550-5775-1B	75 sq. ft. Teleweir Body Assembly	**
4	**519-8310B**	Teleweir Trim Ring - 6-Scallop	**
5	**817-4035B**	35 sq. ft. Teleweir Cartridge	**
	817-4050B	50 sq. ft. Teleweir Cartridge	**
	817-4075B	75 sq. ft. Teleweir Cartridge	**
6	**550-5835-1B**	35 sq. ft. Inner Pipe & Basket Assembly	**
	550-5850-1B	50 sq. ft. Inner Pipe & Basket Assembly	**
	550-5875-1B	75 sq. ft. Inner Pipe & Basket Assembly	**
7	**550-5701B**	Upper Weir Teleweir Sub-Assembly	**
8	**519-0300B**	Teleweir Cap	**

** Please request price quote.

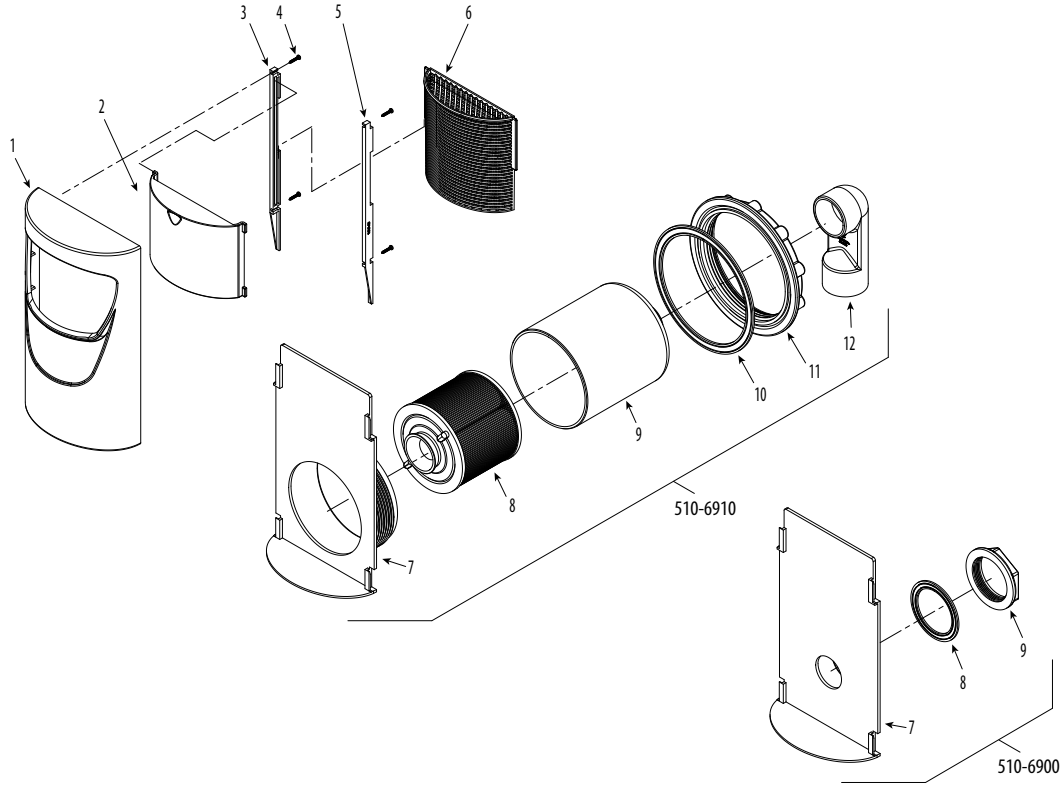

510-6900 - Deluxe Strip Skimmer Replacement Parts

Item	Part No.	Description	List (US $)
1	**519-6900B**	Weir Frame	**
2	**550-6910B**	Weir Door Assembly	**
3	**519-6940.RB**	Guide Frame - Right	**
4	**819-0114B**	Screw *(4 required)*	**
5	**519-6940.LB**	Guide Frame - Left	**
6	**519-6951B**	Basket	**
7	**519-6981B**	Weir Plate Outlet	**
8	**711-4350B**	Wall Fitting Gasket	1.15
9	**718-3150B**	Wall Fitting Nut	**
10	**819-0008B**	Screw, #8 PPH	**

510-6910 - Deluxe Skim FIlter Replacement Parts

Item	Part No.	Description	List (US $)
1	**519-6900B**	Weir Frame	**
2	**550-6910B**	Weir Door Assembly	**
3	**519-6940.RB**	Guide Frame - Right	**
4	**819-0114B**	Screw *(4 required)*	**
5	**519-6940.LB**	Guide Frame - Left	**
6	**519-6951B**	Basket	**
7	**519-6961B**	Weir Plate Outlet	**
8	**817-0020B**	10 sq. ft. Cartridge	44.10
9	**519-6970B**	Weir Filter Housing	**
10	**711-7000B**	Wall Fitting Gasket	6.36
11	**718-7000B**	Wall Fitting Nut	**
12	**411-6910B**	90° Ell - 2" SPG x 2" S	**
13	**819-0008B**	Screw, #8 PPH	**

** Please request price quote.

Replacement Parts / **1 ½" and 2" Top-Load Filter**

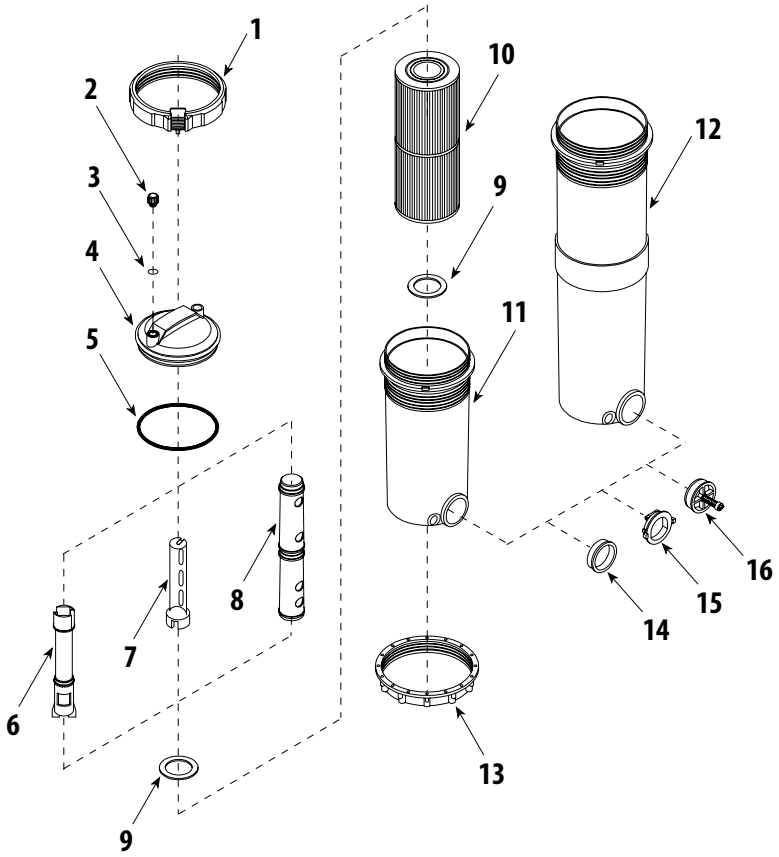

1 ½" and 2" Top-Load Filter Replacement Parts

Item	Part No.	Description	List (US $)
1	**500-1000B**	Lock Ring Assembly	19.52
2	**715-1001B**	Plug - Air Relief	3.99
3	**805-0114B**	O-Ring - Air Relief Plug	1.40
4	**511-1000B**	Filter Lid with Handle	32.06
5	**805-0360B**	O-Ring - Filter Lid	7.58
6	**500-1070B**	Brominator Assembly - 10 Tablet	**
7	**519-1051B**	Mineral Purifier Canister Holder	**
8	**500-1060B**	Flow Restriction Tube	19.53
9	**711-1010B**	Spacer Ring	3.96
10	**817-2500B**	Filter Cartridge - 25 sq. ft. - 4 15/16" OD x 13 5/16" L	60.22
	817-5000B	Filter Cartridge - 50 sq. ft. - 4 15/16" OD x 13 5/16" L	103.03
	817-7500B	Filter Cartridge - 75 sq. ft. - 4 15/16" OD x 23 5/8" L	**
	817-1000B	Filter Cartridge - 100 sq. ft. - 4 15/16" OD x 23 5/8" L	**
11	**550-5000B**	1 ½" Filter Body - with Bypass	120.12
	550-4990B	1 ½" Filter Body - with Plug	117.24
	550-5010B	2" Filter Body - with Bypass	**
	550-5060B	2" Filter Body - with Plug	119.04
12	**550-5110B**	1 ½" Extended Filter Body - with Bypass	**
	550-5150B	1 ½" Extended Filter Body - with Plug	**
	550-5230B	2" Extended Filter Body - with Bypass	188.78
	550-5220B	2" Extended Filter Body - with Plug	**
13	**718-1000B**	Nut - Filter Body	15.84
14	**715-1010B**	1 ½" Plug	**
	715-9900B	2" Plug	**
15	**600-1040B**	2" Bypass Valve Assembly	10.38
16	**600-1000B**	1 ½" Bypass Valve Assembly	10.48

** Please request price quote.

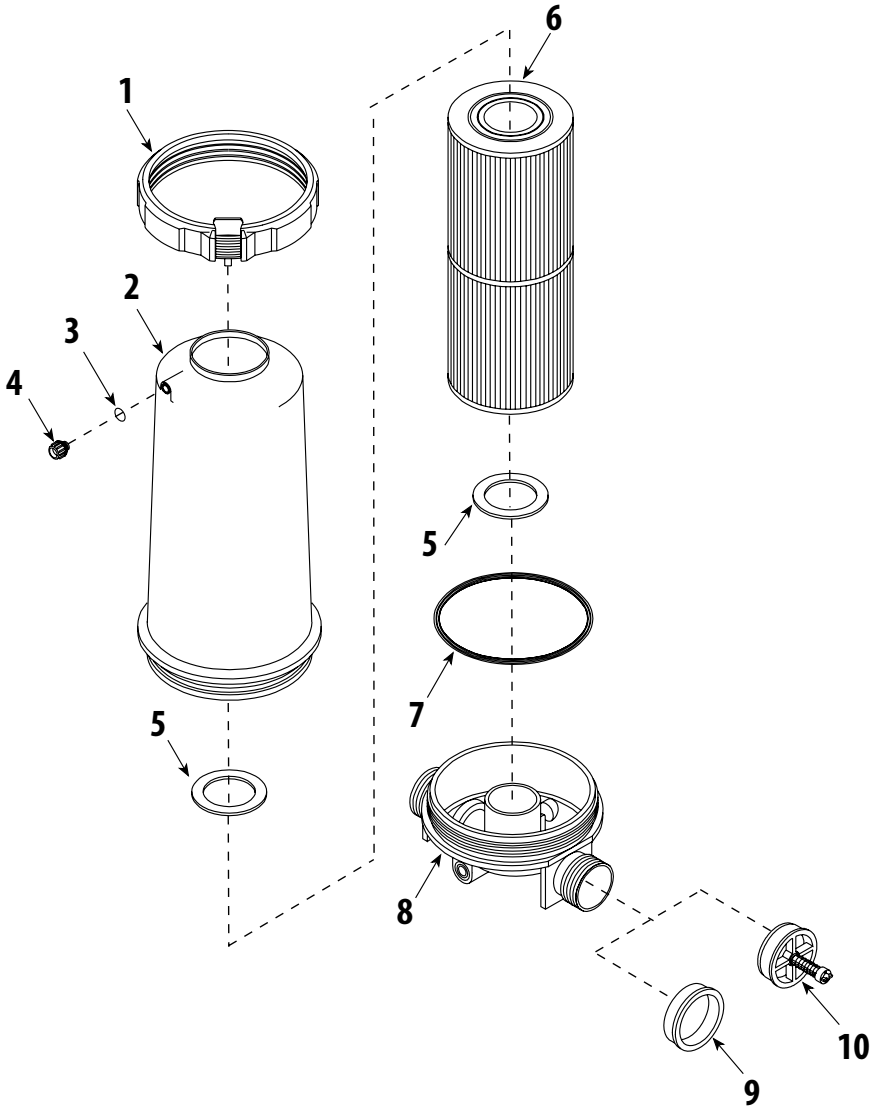

1 ½" In-Line Filter Replacement Parts			
Item	Part No.	Description	List (US $)
1	**500-1000B**	Lock Ring Assembly	19.52
2	**515-1010B**	In-line Filter Body	106.90
3	**805-0114B**	O-Ring - Air Relief Plug	1.40
4	**715-1001B**	Plug - Air Relief	3.99
5	**711-1010B**	Spacer Ring	3.96
6	**817-2500B**	Filter Cartridge - 25 sq. ft. - 4 15/16" OD x 13 5/16" L	60.22
	817-5000B	Filter Cartridge - 50 sq. ft. - 4 15/16" OD x 13 5/16" L	103.03
7	**805-0360B**	O-Ring - Filter Lid	7.58
8	**511-1010B**	1 ½" Filter Lid	19.55
9	**715-1010B**	1 ½" Plug	**
10	**600-1000B**	1 ½" Bypass Valve	10.48

** Please request price quote.

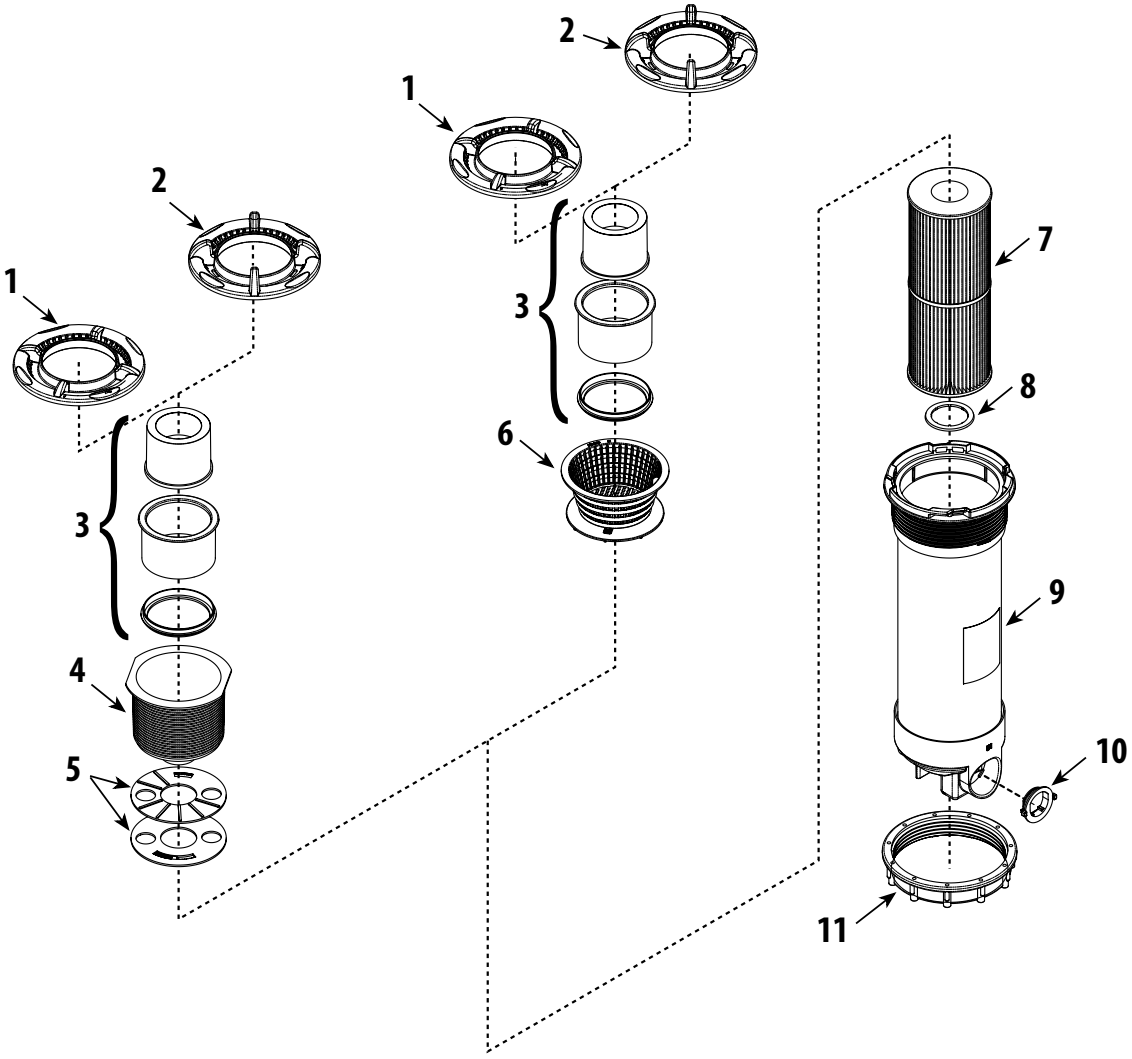

Dyna-Flo Top Mount Skim Filter Replacement Parts

Item	Part No.	Description	List (US $)
1	**519-8070B**	4-Scallop Trim Ring - Low Volume - White	16.83
2	**519-8050B**	4-Scallop Trim Ring - High Volume - White	13.32
3	**550-2630B**	Weir Assembly - 3-Piece - White	27.72
4	**519-8000B**	Basket - White - 6.4" diameter x 5.62" H	12.21
5	**519-3010B**	Diverter Plate	18.92
6	**500-2680B**	Low Profile Basket Assembly - White - 6.35" diameter x 2.75" H	33.80
7	**817-2500B**	Filter Cartridge - 25 sq. ft. - 4 15/16" OD x 13 5/16" L	60.22
	817-3501B	Filter Cartridge - 40 sq. ft. - 4 15/16" OD x 9 1/4" L	**
	817-5000B	Filter Cartridge - 50 sq. ft. - 4 15/16" OD x 13 5/16" L	103.03
8	**711-1010B**	Spacer Ring	3.96
9	**--**	Body	**
10	**600-1040B**	2" Bypass Valve	10.38
11	**718-1000B**	Nut - Filter Body	15.84

** Please request price quote.

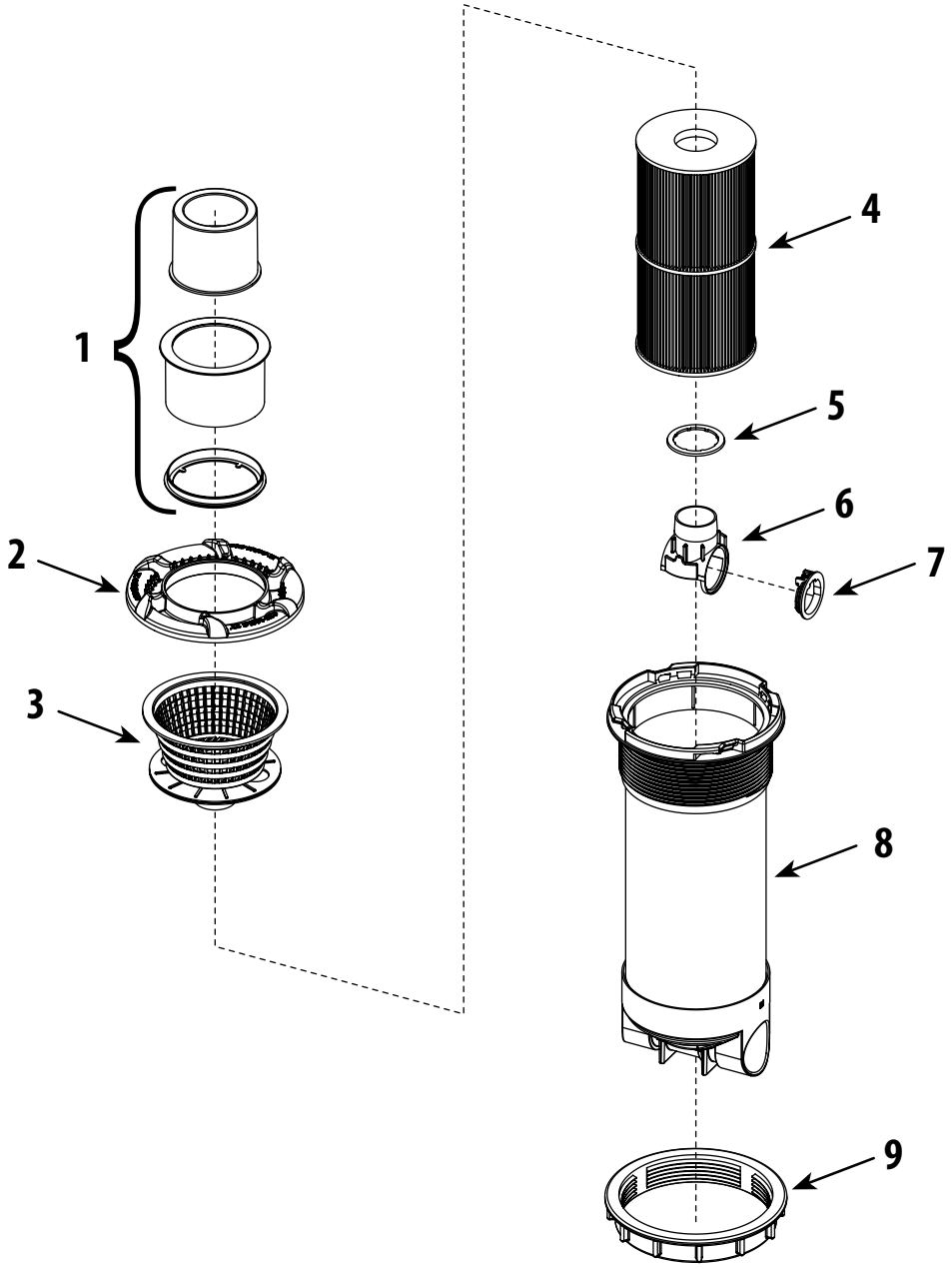

Dyna-Flo XL Skim Filter Replacement Parts

Item	Part No.	Description	List (US $)
1	**550-8620B**	Weir Assembly	**
2	**519-8260B**	Scalloped Trim Ring	**
3	**550-8631B**	Basket Assembly - Black - 8.0" diameter x 3.5" H	**
4	**817-0017B**	Dyna-Flo XL Cartridge - 50 sq. ft. - 2 3/8" x 6 9/16" OD x 13 5/16" L	**
	817-0018B	Dyna-Flo XL Cartridge - 75 sq. ft. - 2 3/8" x 6 9/16" OD x 13 5/16" L	**
	817-0019B	Dyna-Flo XL Cartridge - 100 sq. ft. - 2 3/8" x 6 9/16" OD x 17 13/16" L	**
5	**711-8200B**	Spacer Ring	**
6	**602-8210B**	Bottom Body Insert with Bypass Valve	**
7	**600-1020B**	2 ½" Bypass Valve	**
8	**--**	Body	**
9	**718-8200B**	Nut	**

** Please request price quote.

Ultra Skim Filter Assembly
514-6550

Ultra Skim XL Filter Assembly
514-6580

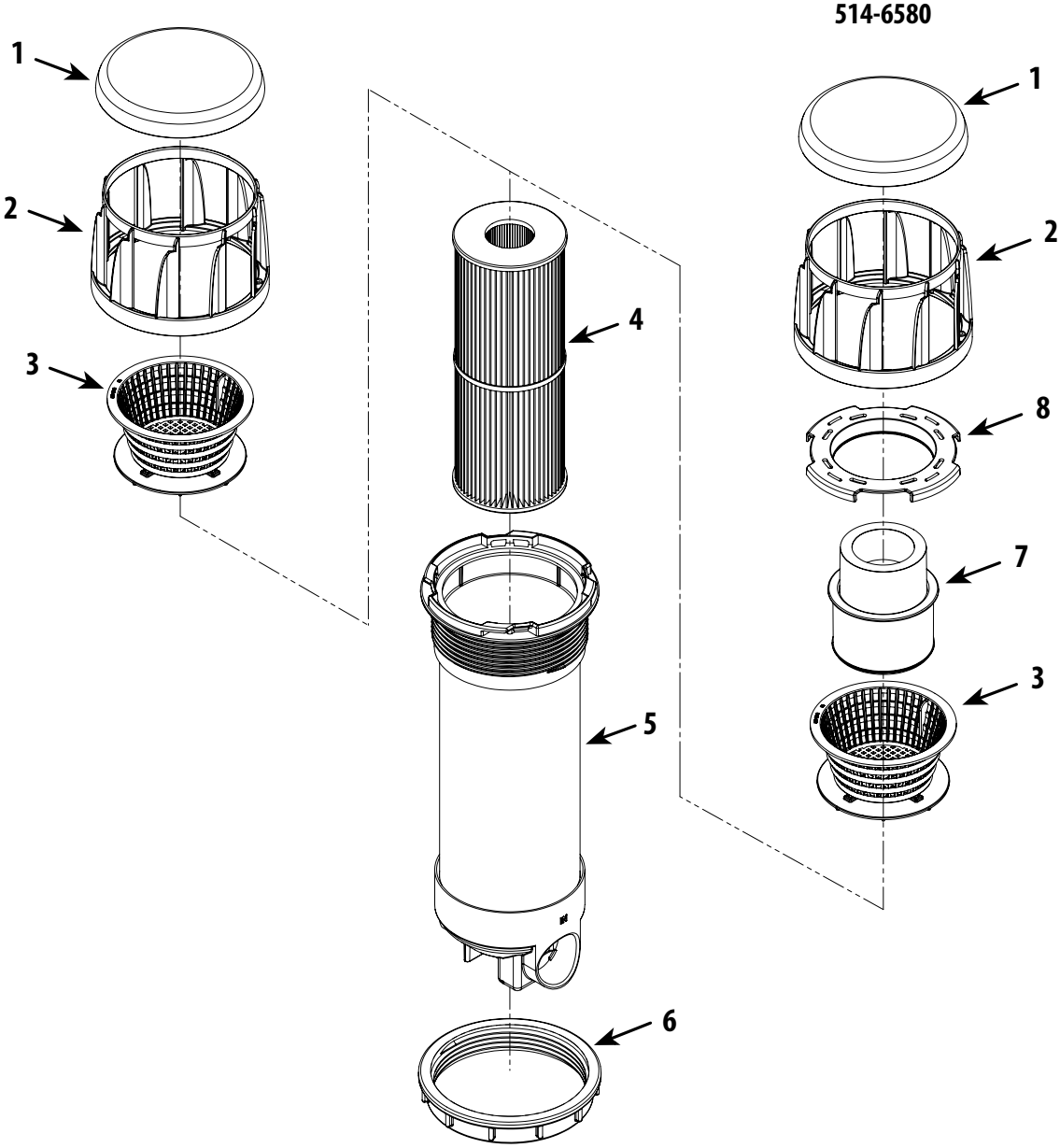

Ultra Skim Filter Replacement Parts

Item	Part No.	Description	List (US $)
1	**519-8160B**	Lid	**
2	**519-8150B**	Turbine	**
3	**500-2697B**	Basket Assembly - 6.35" diameter x 2.75" H	**
4	**817-2500B**	Filter Cartridge - 25 sq. ft. - 4 15/16" OD x 13 5/16" L	60.22
	817-3501B	Filter Cartridge - 40 sq. ft. - 4 15/16" OD x 9 1/4" L	**
	817-5000B	Filter Cartridge - 50 sq. ft. - 4 15/16" OD x 13 5/16" L	103.03
5	**--**	Body	**
6	**718-1000B**	Filter Body Nut	15.84
7	**550-2630B**	Weir Assembly - 3 Piece - White	27.72
8	**519-2010B**	Ultra Skim Filter - Weir Retainer Ring	**

** Please request price quote.

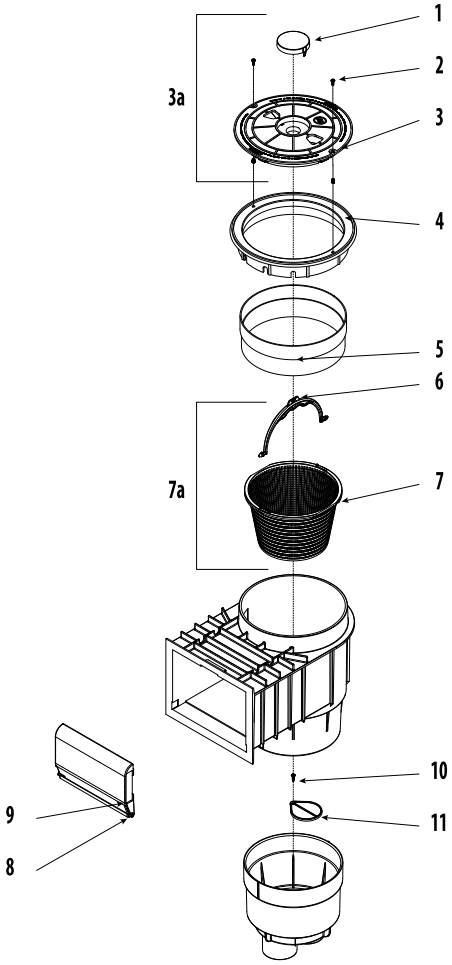

Renegade Gunite In-Ground Skimmer

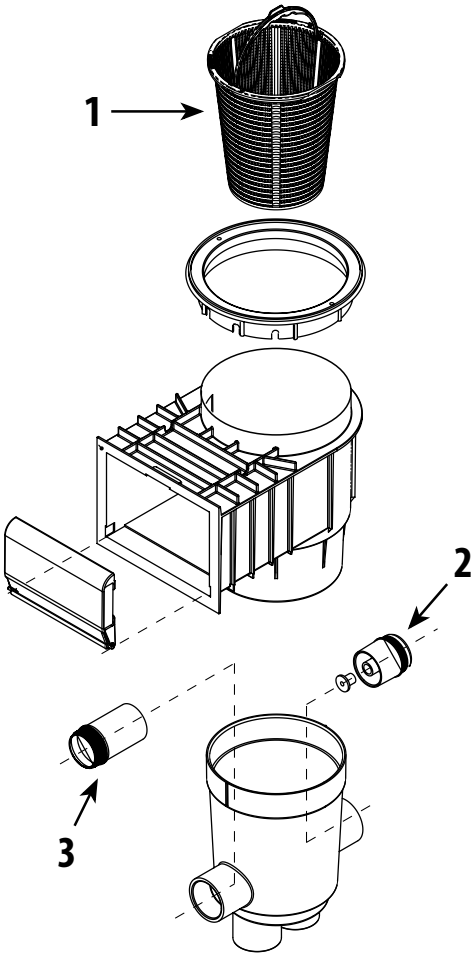

Renegade Venturi and Deep Basket

Renegade Gunite In-Ground Skimmer Replacement Parts

Item	Part No.	Description	List (US $)
1	**519-6460B**	Blank Lid Insert	**
2	**819-0005B**	Screw #8-32 x 7/16" Phil Pan Head (2 required)	**
3	**519-6450B**	Lid - White	27.55
3a	**540-6470WWB**	Lid with Logo Insert	25.06
4	**519-6420B**	Lid Mounting Ring with Insert - White	24.90
5	**519-6570B**	Mounting Ring Extension	14.10
6	**519-3250B**	Basket Handle	3.39
7	**519-3240B**	Basket - 8.12" diameter x 5.25" H	12.09
7a	**542-3240B**	Basket Assembly with Handle	15.83
8	**550-995xB**	Weir Door Assembly	**
9	**865-0200B**	Weir Door Foam	2.05
10	**819-4350B**	Screw #8 x 5/8" PNHD Phil.	**
11	**519-6470B**	Diverter Plate	6.28

Renegade Venturi and Deep Basket Skimmer Replacement Parts

Item	Part No.	Description	List (US $)
1	**542-9600B**	Venturi Basket Assembly - 8.12" diameter x 9.0" H	26.60
2	**542-9610B**	Venturi Nozzle Fitting Assembly	**
3	**519-9650B**	2" Outlet Port	**

** Please request price quote.

Replacement Parts / **Renegade Vinyl Liner Skimmer**

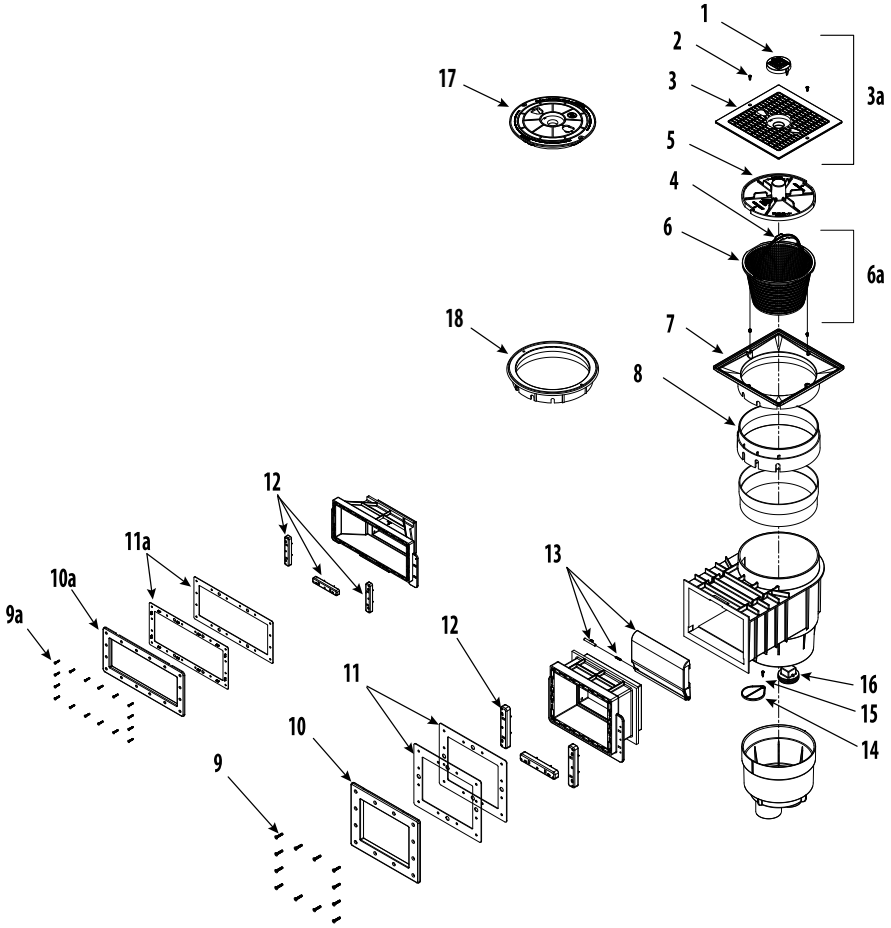

Renegade Vinyl Liner Skimmer Replacement Parts

Item	Part No.	Description	List (US $)
1	**519-6460WWB**	Logo Lid Insert	**
2	**819-0005B**	Screw #8 32 x 7/16" (2 required)	**
3	**519-9500B**	Square Lid	14.75
3a	**540-6490WWB**	Square Lid with Logo Insert	29.25
4	**519-3250B**	Basket Handle	3.39
5	**519-6480B**	Vacuum Plate - Twist-Lock (2013 & older)	**
5a	**519-6480-R1B**	New Vacuum Plate (2014 & newer)	22.12
6	**519-3240B**	Basket - 8.12" diameter x 5.25" H	12.09
6a	**542-3240B**	Basket Assembly with Handle	15.83
7	**519-9510B**	Square Collar	22.10
8	**519-949xB**	Extended Collar Deck Flange - Square	13.91
9	**819-6945B**	Screw #12 x 1 ¼" PFH (12 required)	1.04
9a	**819-0030B**	#12 x 1 ¼" Phlps Pan Head Screw SS (12 Required)	1.04
10	**519-9530B**	Mounting Plate - Standard	23.80
10a	**519-9550B**	Mounting Plate - Wide Mouth	32.08
11	**711-9510B**	Gasket - Standard (2 required)	**
11a	**711-9520B**	Gasket - Wide Mouth (2 required)	**
12	**713-9520B**	Spacer (3 required)	15.12
13	**550-995xB**	Weir Door Assembly	**
14	**519-6470B**	Diverter Plate	6.28
15	**819-4350B**	Screw - 8 x 5/8"	**
16	**715-9910B**	2" NPT Plug	**
17	**519-6450B**	Pool Skimmer Lid - R1	27.55
18	**519-6420B**	Mounting Ring	24.90

** Please request price quote.

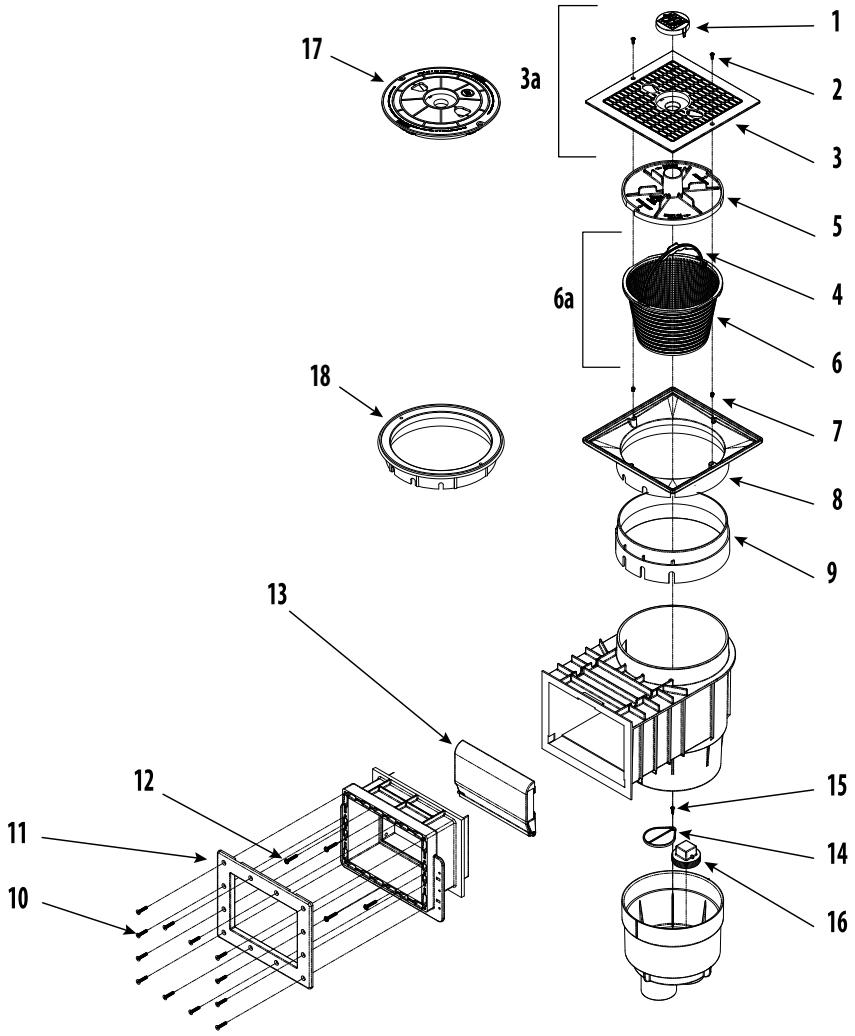

Renegade Fiberglass Skimmer Replacement Parts

Item	Part No.	Description	List (US $)
1	**519-6460WWB**	Logo Lid Insert	**
2	**819-0005B**	Screw #8-32 x 7/16" Phil Pan Head (2 required)	**
3	**519-9500B**	Square Lid	14.75
3a	**540-6490WWB**	Square Lid with Logo Insert	29.25
4	**519-3250B**	Basket Handle	3.39
5	**519-6480B**	Vacuum Plate - Twist-Lock (2013 & older)	**
5a	**519-6480-R1B**	New Vacuum Plate (2014 & newer)	22.12
6	**519-3240B**	Basket - 8.12" diameter x 5.25" H	12.09
6a	**542-3240B**	Basket Assembly with Handle	15.83
7	**820-4110B**	Screw Lock (2 required)	**
8	**519-9510B**	Square Collar	22.10
9	**519-6560B**	Mounting Ring Extension (2 included)	13.91
10	**819-6950B**	Screw #12 x 1 ½" PFH Type B (12 required)	3.56
11	**519-9530B**	Mounting Plate	23.80
12	**819-0030B**	Screw #12 x 1 ¼" PPH Stainless Steel (4 required)	0.88
13	**550-995xB**	Weir Door Assembly	**
14	**519-6470B**	Diverter Plate	6.28
15	**819-4350B**	Screw #8 x ⅝" PNHD Phil	**
16	**715-9910B**	2" NPT Plug	**
17	**519-6450B**	Pool Skimmer Lid - R1	27.55
18	**519-6420B**	Mounting Ring	24.90

** Please request price quote.

Replacement Parts / **Flo-Pro II Above Ground Skimmer**

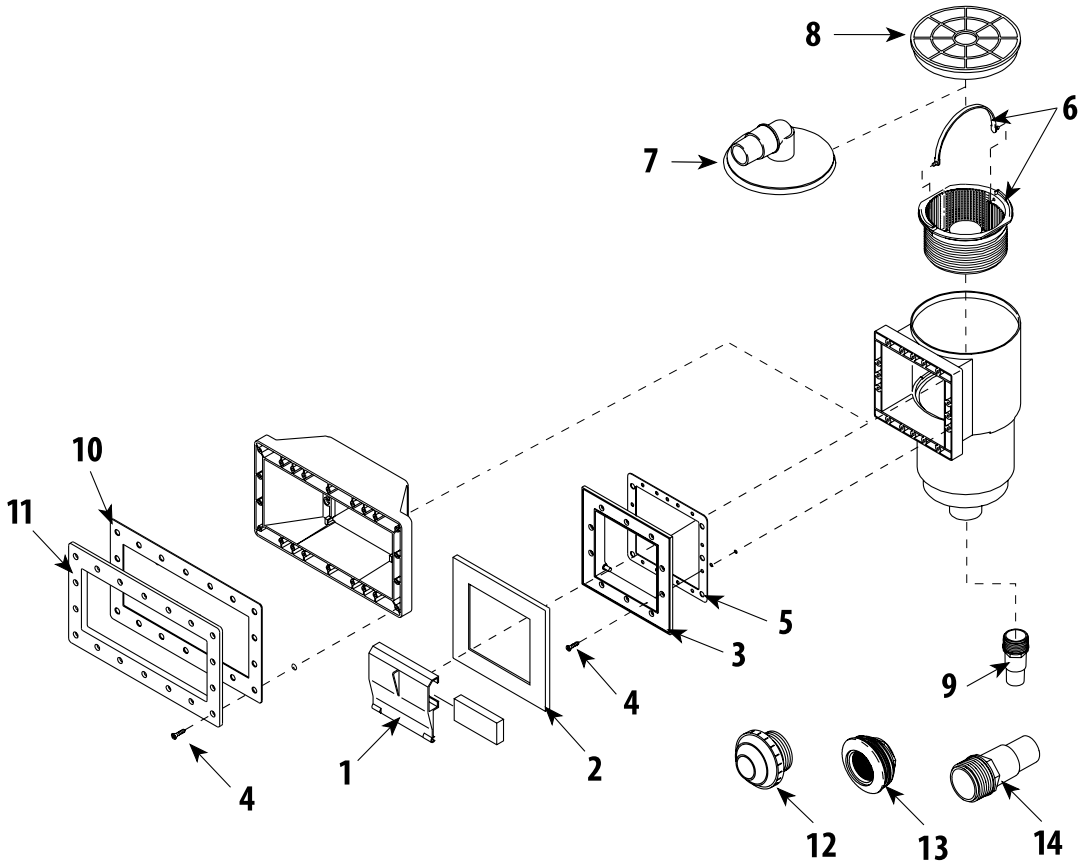

Flo-Pro II Above-Ground Skimmer Replacement Parts

Item	Part No.	Description	List (US $)
1	**542-3060B**	Weir Door Assembly with Foam	12.81
2	**519-3090B**	Trim Plate *(optional)*	16.42
3	**519-3180B**	Mounting Plate - Front Access	18.77
4	**819-0006B**	Screw - #12 x 1 ¼" PFH 18-8 Sms *(10 for Regular Skimmer; 18 for Wide Mouth)*	0.87
5	**711-0060B**	Anti-Rust Wall Protection Gasket - Regular	11.73
6	**550-1030B**	Basket Assembly with Handle - 6.38" diameter x 4.10" H	16.45
7	**519-3150B**	Vacuum Plate - Front Access with 90° Elbow	15.09
8	**519-3030B**	Lid - Front Access	7.53
9	**417-6140B**	Hose Adapter - 1 ½" MPT x 1 ½" Hose	3.20
	417-6150B	Hose Adapter - 1 ½" Barb *(optional)*	3.81
10	**711-0070B**	Anti-Rust Wall Protection Gasket - Wide Mouth	12.75
11	**519-4110B**	Mounting Plate - Wide Mouth	**
12	**400-1410DB**	Eyeball Fitting - ¾" Eyeball	5.56
	400-1410EB	Eyeball Fitting - 1" Eyeball	5.56
13	**400-9170B**	Return Wall Fitting with Locknut and Gaskets - 1 ½" FPT	11.28
14	**417-6060B**	Hose Adapter Fitting - 1 ½" MPT x 1 ¼" Hose	2.59

** Please request price quote.

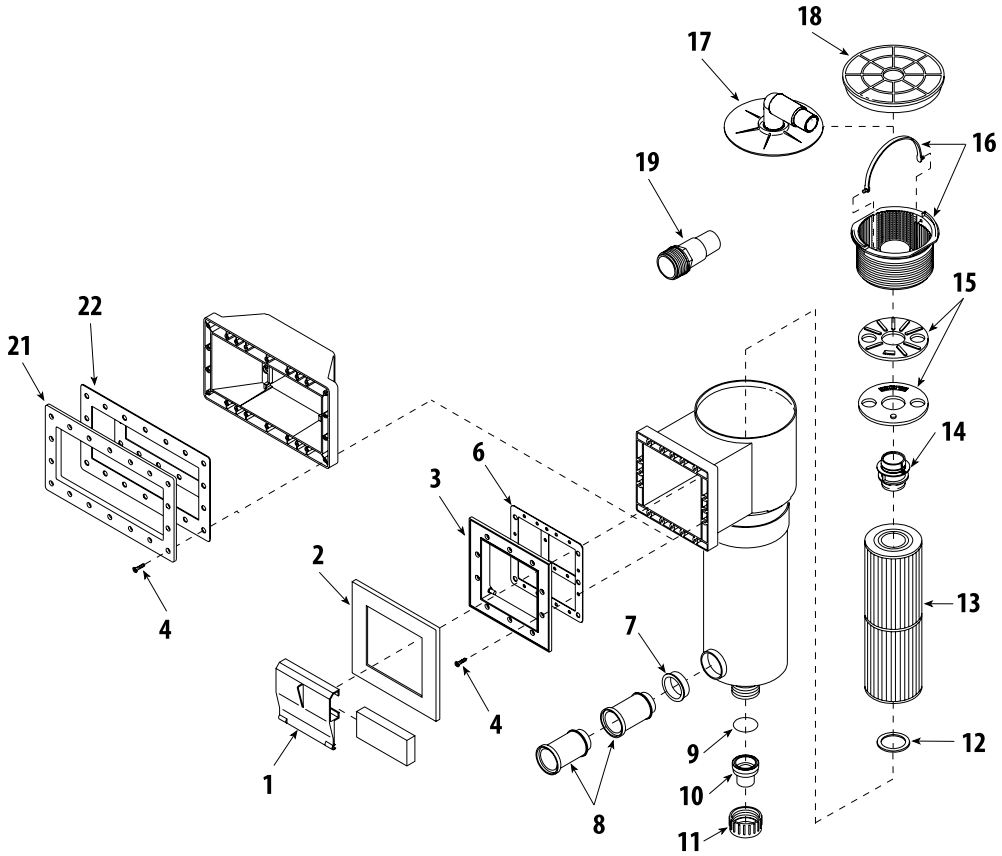

Flo-Pro Skim Filter Replacement Parts

Item	Part No.	Description	List (US $)
1	**542-3060B**	Weir Door Assembly with Foam	12.81
2	**519-3090B**	Trim Plate - Front Access *(optional)*	16.42
3	**519-3080B**	Mounting Plate - Front Access - Short Throat Only	**
	519-3180B	Mounting Plate - Front Access - Long Throat Only	18.77
4	**819-0006B**	Screw - #12 x 1 ¼" PFH 18-8 Sms	0.87
6	**711-0060B**	Anti-Rust Wall Protection Gasket - Regular	11.73
7	**715-2030B**	2" Plug	**
8	**519-3190B**	Support Piece - Short Throat	**
	519-3170B	Extension - Support Piece - Wide Mouth	**
9	**805-0226B**	O-Ring - Union	0.76
10	**417-6020B**	1 ½" Tailpiece x 1 ½" Hose Adapter Fitting - with O-Ring Groove	3.40
11	**415-4000B**	1 ½" Union Nut	3.18
12	**711-1010B**	Spacer Ring	3.96
13	**817-2500B**	Filter Cartridge - 25 sq. ft. - 4 15/16" OD x 13 5/16" L	60.22
	817-5000B	Filter Cartridge - 50 sq. ft. - 4 15/16" OD x 13 5/16" L	103.03
14	**519-3100B**	Collar Plate	7.53
15	**519-3010B**	Diverter Plate	18.92
16	**550-1030B**	Basket Assembly with Handle - 6.38" diameter x 4.10" H	16.45
17	**519-3150B**	Vacuum Plate with 90° Elbow	15.09
18	**519-3030B**	Lid	7.53
19	**417-6060B**	Hose Adapter Fitting - 1 ½" MPT x 1 ¼" Hose Barb	2.59
21	**519-4110B**	Mounting Plate - Wide Mouth	**
22	**711-0070B**	Anti-Rust Wall Protection Gasket - Wide Mouth	12.75

** Please request price quote.

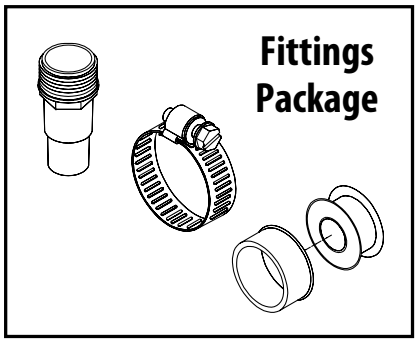

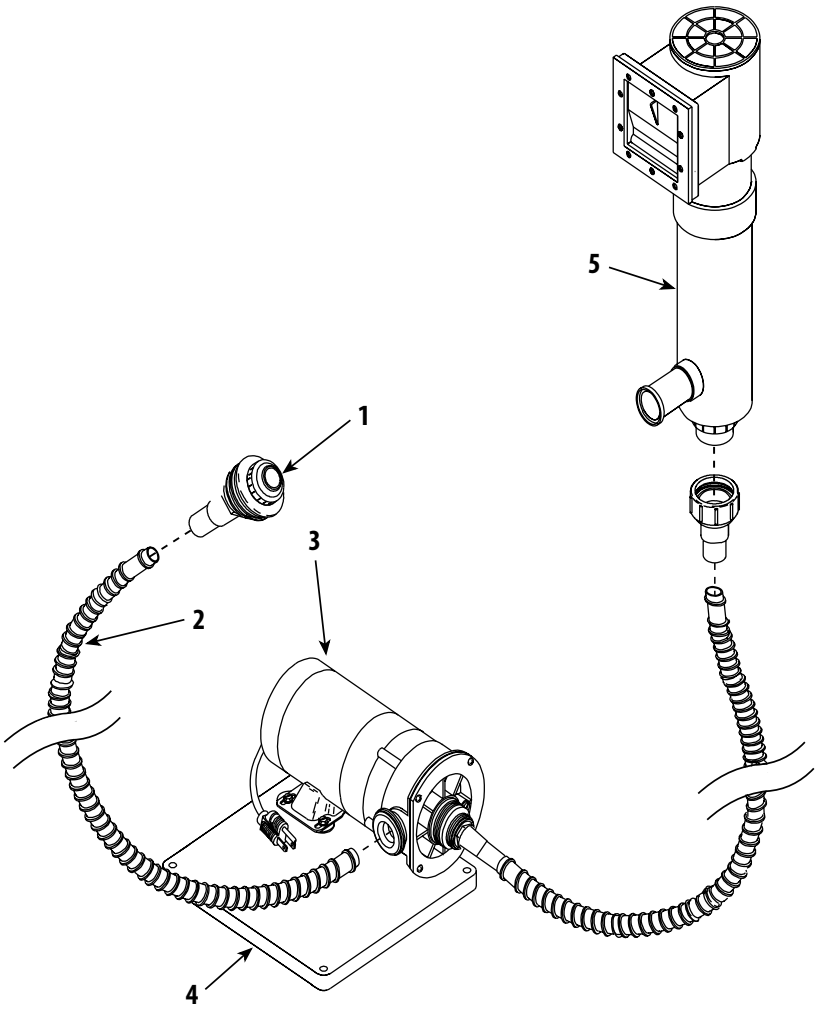

TWM Skim Filter Replacement Parts

Item	Part No.	Description	List (US $)
1	**550-9340B**	Deluxe Return 1" Eyeball Fitting	19.44
2	**872-9000B**	Corrugated Hose - 1 ½" x 6 ft.	**
3	**--**	Pump	**
4	**672-1010B**	Equipment Base - 1" x 14 ½" x 15"	36.75
5	**560-J0A50TB**	Skim Filter Assembly - 50 sq. ft.	**

Fittings Package Contents

Item	Part No.	Description	List (US $)
--	**417-6061B**	1 ½" MPT x 1 ¼" Hose Adapter Fitting (2 required)	3.17
--	**872-0011B**	2 ½" Hose Clamp - Stainless Steel (4 required)	**
--	**902-2000B**	Teflon Tape - ½" x 100" roll	6.30

** Please request price quote.

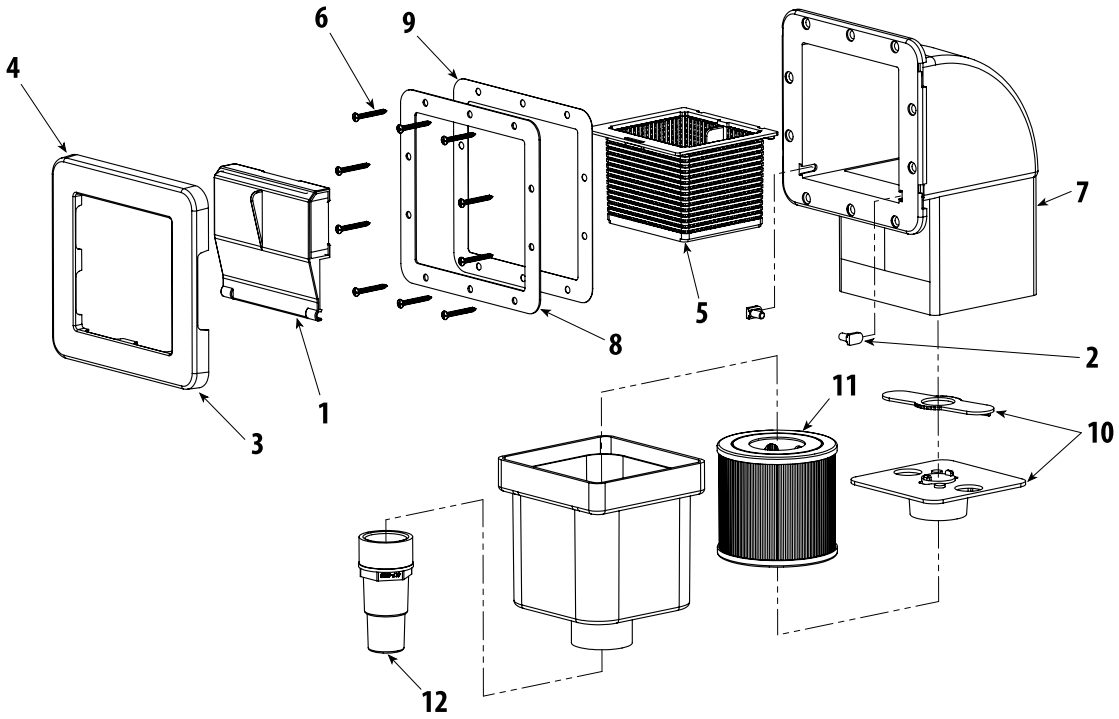

Spa Skimmer and Skim Filter Replacement Parts

Item	Part No.	Description	List (US $)
1	**550-4050B**	Weir Door with Foam - Square Spa Skimmer	15.91
2	**519-4020B**	Hinge - Square Skim Filter - White	2.31
3	**916-1010B**	Stainless Steel Escutcheon *(optional)*	32.50
4	**519-4090B**	Square Trim Plate - Plastic - Old Style	15.80
5	**519-4030B**	Basket - 4.80" x 5.10" x 3.45" H	13.94
6	**819-6930B**	Screw - #8 x 1 ½" Flathead Phillips	**
7	**550-4060B**	1 ½" Square Body with Base	**
	550-4080B	1 ½" Square Body - 10 sq. ft. Skim Filter	**
	550-4090B	1 ½" Square Body - 20 sq. ft. Skim Filter	**
8	**806-1070B**	Gasket - Mounting Plate	**
9	**519-1600B**	Mounting Plate *(optional)*	15.82
10	**550-1500B**	Diverter Plate Assembly	**
11	**817-0010B**	Filter Cartridge - 10 sq. ft. - 4 ¼" OD x 4" L	**
12	**417-6080B**	Hose Adapter Fitting - 1 ½" Spigot x 1 ¼" Hose *(optional)*	3.18

** Please request price quote.

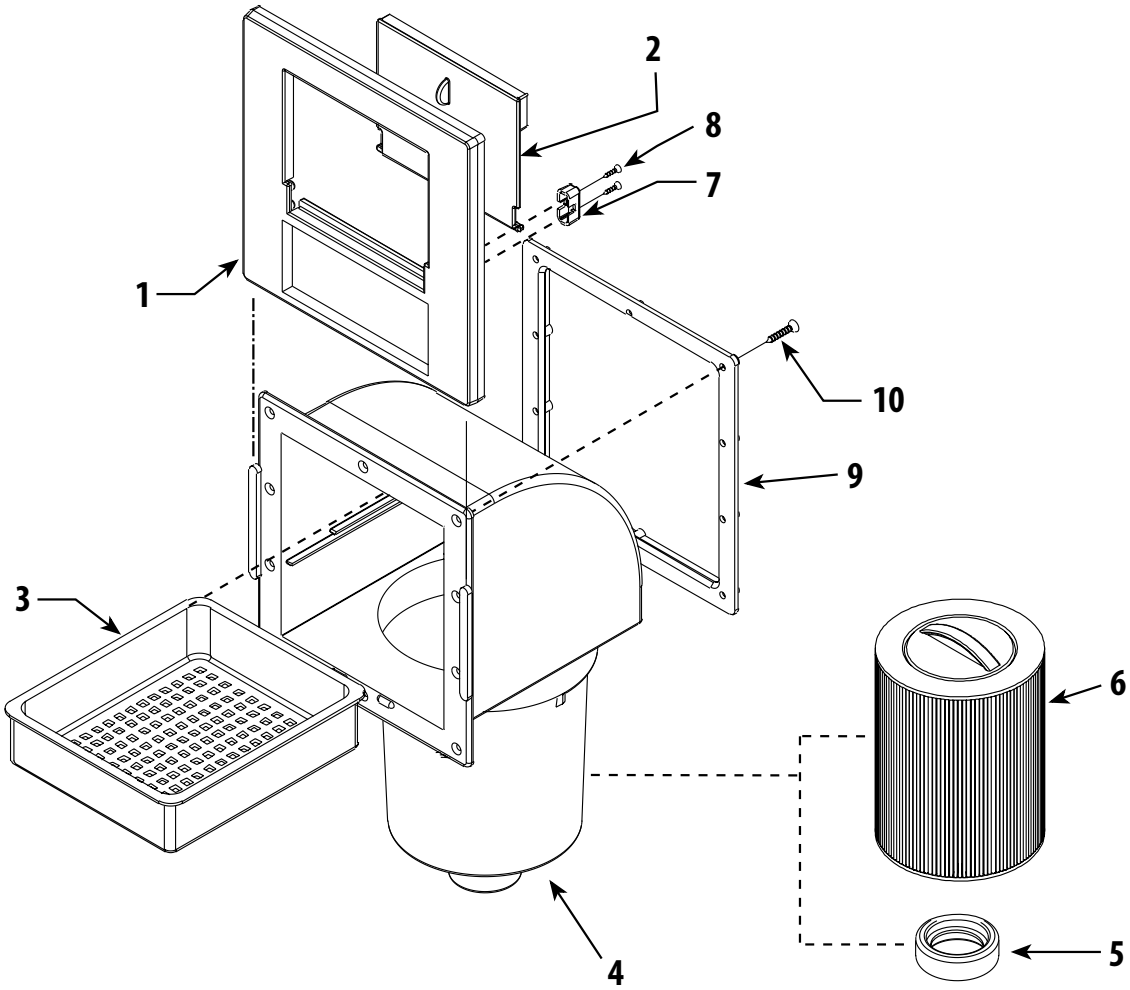

50 sq. ft. Skim Filter Replacement Parts			
Item	Part No.	Description	List (US $)
1	**519-9010B**	Front Plate	47.26
2	**550-9000B**	Weir Door Assembly	27.61
3	**519-9050B**	Basket	18.81
4	**550-9010B**	Filter Body Assembly - 50 sq. ft.	113.06
5	**519-6640B**	Retainer Ring	14.10
6	**817-0050B**	50 sq. ft. Filter Cartridge - 6" OD x 8 ¼" L	86.11
7	**519-6240B**	Hinge Mount	**
8	**819-3260B**	Screw - #6 - 20 x $^5/_8$" POH	0.29
9	**519-9040B**	Mounting Plate	**
10	**819-0006B**	Screw - #12 x 1 ¼" PFH	0.87

** Please request price quote.

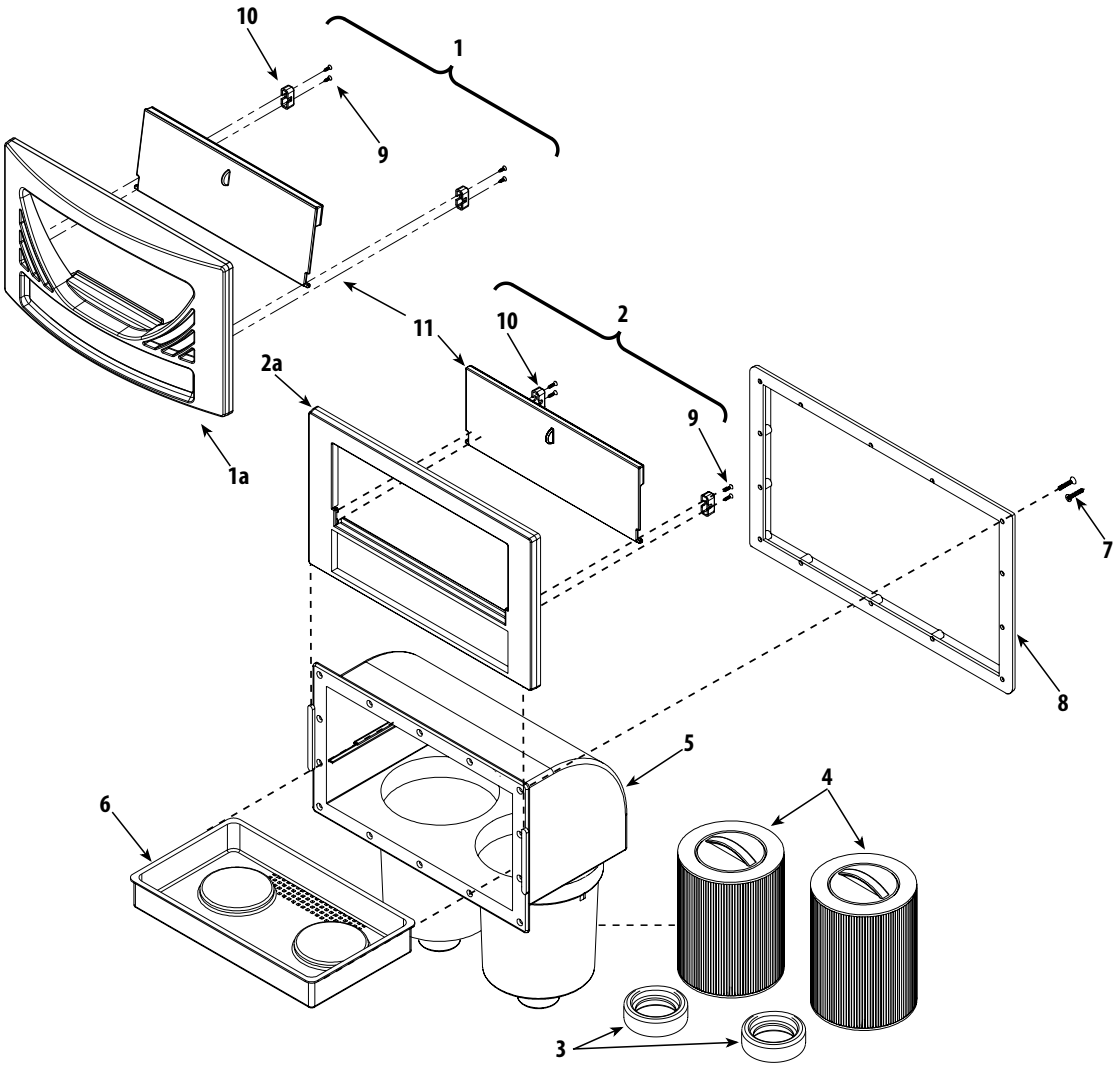

100 sq. ft. Skim Filter Replacement Parts

Item	Part No.	Description	List (US $)
1	**550-6630B**	Front Access Plate Assembly - Oval	**
1a	**519-6630B**	Blank Front Access Plate - Oval	**
2	**550-6610B**	Front Access Plate Assembly - Flat	**
2a	**519-6650B**	Blank Front Access Plate	**
3	**519-6640B**	Retainer Ring	14.10
4	**817-0050B**	50 sq. ft. Filter Cartridge - 6" OD x 8 ¼" L	86.11
5	**550-6620B**	Filter Body Assembly	**
6	**519-6610B**	Basket	**
7	**819-0030B**	Screw - #12 x 1 ¼" PFH	0.88
8	**519-6680B**	Mounting Plate	**
9	**819-3260B**	Screw - #6 -20 x ⅝" POH	0.29
10	**519-6240B**	Hinge Mount	**
11	**550-6600B**	Weir Door Assembly	**

** Please request price quote.

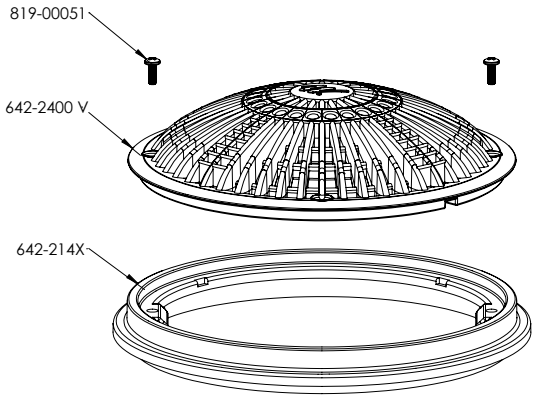

Tru Flo 8" Drain Cover Replacement Parts

Item	Part No.	Description	List (US $)
1	**819-0051B**	#8 Stainless Steel Screw - 32 x 7/16	**
2	**642-2400 VB**	8" Tru Flo Drain Cover	**
3	**642-214XB**	8" Tru Flo Drain Frame	**
4	**640-234x VB**	8" Tru Flo Drain Cover and Ext. Collar Assy	**

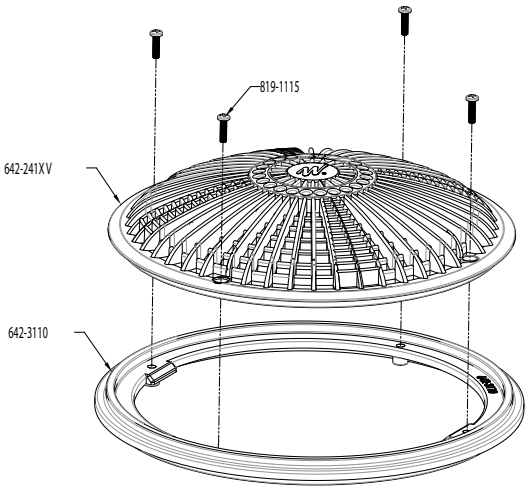

Tru Flo 10" Drain Cover Replacement Parts

Item	Part No.	Description	List (US $)
1	**819-1115B**	#8 Stainless Steel Screw - 32 x 5/8	1.29
2	**642-241X VB**	10" Tru Flo Drain Cover	**
3	**642-311XB**	10" Tru Flo Drain Frame	**
4	**640-191x VB**	10" Tru Flo Drain Cover and Ext. Collar Assy	**

** Please request price quote.

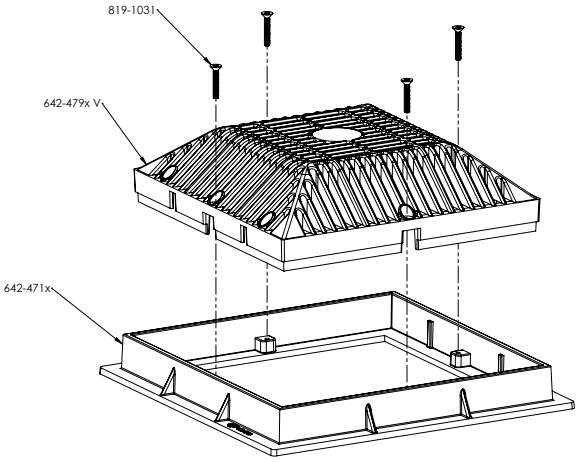

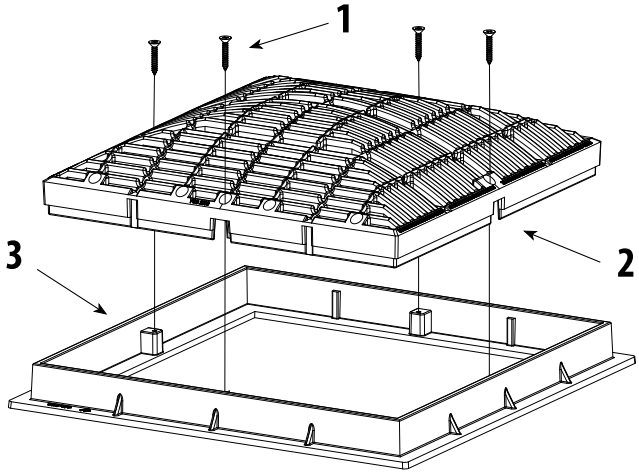

9" x 9" Grate & Frame Replacement Parts

Item	Part No.	Description	List (US $)
1	**819-1031B**	#8 x 1 Stainless Steel Screw	1.93
2	**642-479x VB**	9" x 9" Pool Grate	**
3	**642-471xB**	9" x 9" Grate Frame	**

12" x 12" Grate & Frame Replacement Parts

Item	Part No.	Description	List (US $)
1	**819-1031B**	#8 x 1 Stainless Steel Screw	1.93
2	**642-4720 VB**	12" x 12" Pool Grate	95.85
3	**642-4730B**	12" x 12" Grate Frame	**

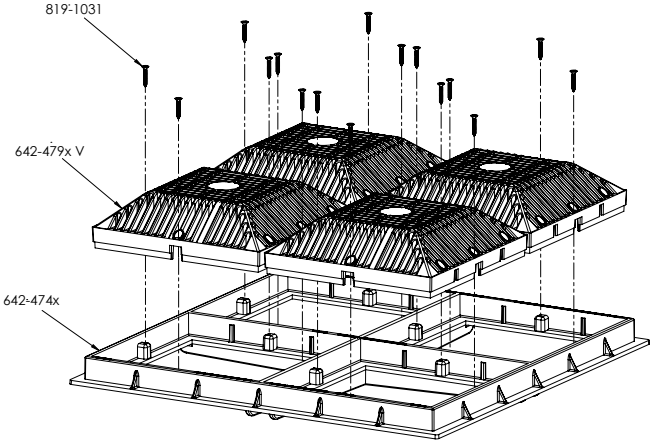

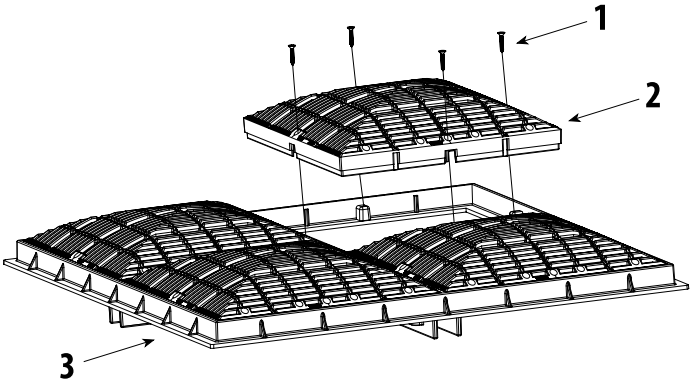

18" x 18" Grate & Frame Replacement Parts

Item	Part No.	Description	List (US $)
1	**819-1031B**	#8 x 1 Stainless Steel Screw	1.93
2	**642-479X VB**	9" x 9" Pool Grate	**
3	**642-474XB**	18" x 18" Grate Frame	**

24" x 24" Grate & Frame Replacement Parts

Item	Part No.	Description	List (US $)
1	**819-1031B**	#8 x 1 Stainless Steel Screw	1.93
2	**642-4720 VB**	12" x 12" Grate	95.85
3	**642-4760B**	24" x 24" Grate Frame	**

** Please request price quote.

Vinyl Liner

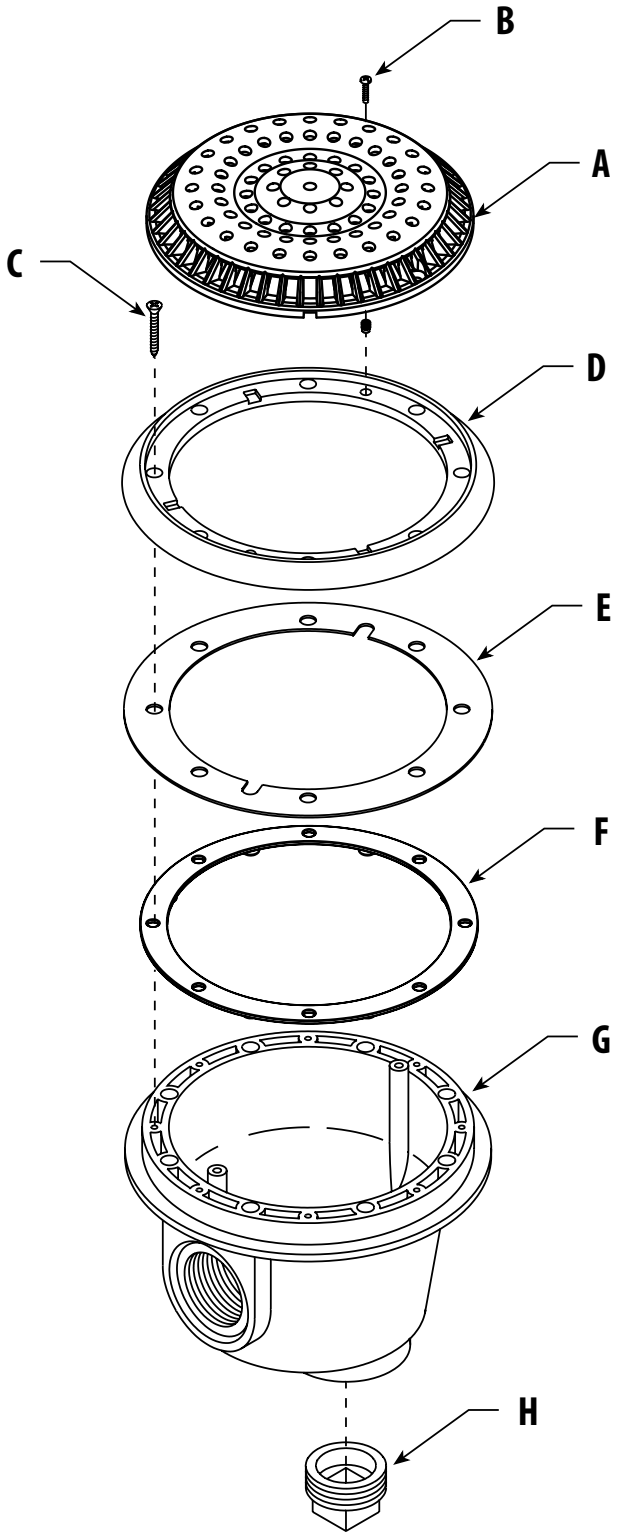

Concrete

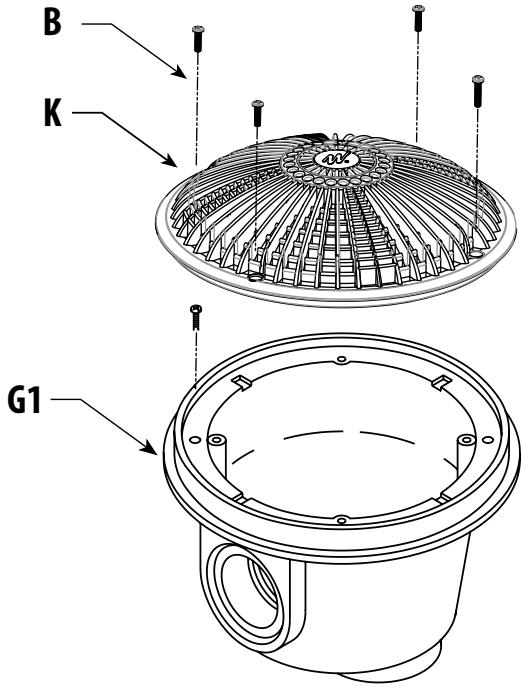

Main Drain Replacement Parts

Item	Part No.	Description	List (US $)
A	**645-2150 VB**	8" Anti-Vortex Cover - White *(with screws)*	**
	645-2151 VB	8" Anti-Vortex Cover - Black *(with screws)*	**
	645-2157 VB	8" Anti-Vortex Cover - Gray *(with screws)*	**
	645-2159-DKG VB	8" Anti-Vortex Cover - Dark Gray *(with screws)*	**
	645-2159-BEI VB	8" Anti-Vortex Cover - Beige *(with screws)*	**
	645-2159-DKB VB	8" Anti-Vortex Cover - Dark Blue *(with screws)*	**
B	**819-0005B**	Cover Screws *(Anti-Vortex only)* (2 required)	**
C	**819-6940B**	Mounting Screw (8 required)	2.19
D	**642-2090B**	Vinyl Liner Main Drain Mounting Plate - White	20.16
	642-2091B	Vinyl Liner Main Drain Mounting Plate - Black	20.16
	642-2097B	Vinyl Liner Main Drain Mounting Plate - Gray	20.16
E	**806-3000B**	Gasket - Vinyl Liner Main Drain Assembly(1 required)	10.30
F	**711-2600B**	Gasket - Vinyl Liner Main Drain Body (Stay-In-Place) (1 required)	11.13
G	**672-2420B**	Body - Main Drain Vinyl Liner - 1 ½" FPT	**
	672-2530B	Body - Main Drain Vinyl Liner - 2" FPT	**
	672-2430B	Body - Main Drain Vinyl Liner - 1 ½" S	**
	672-2520B	Body - Main Drain Vinyl Liner - 2" S	**
G1	**672-2500B**	Body - 8" Main Drain Concrete - 2" FPT *(bulk packed)*	**
	672-2410B	Body - 8" Main Drain Concrete - 1 ½" S *(bulk packed)*	**
	672-2510B	Body - 8" Main Drain Concrete - 2" S *(bulk packed)*	**
H	**715-1230B**	1 ½" NPT Plug	**
	715-9910B	2" NPT Plug	**
K	**642-2400 VB**	8" Tru Flo Drain Cover - White	**
	642-2401 VB	8" Tru Flo Drain Cover - Black	**
	642-2407 VB	8" Tru Flo Drain Cover - Gray	**
	642-2409-DKG VB	8" Tru Flo Drain Cover - Dark Gray	**
	642-2409-BEI VB	8" Tru Flo Drain Cover - Beige	**
	642-2410 VB	10" Tru Flo Drain Cover - White	**
	642-2411 VB	10" Tru Flo Drain Cover - Black	**
	642-2417 VB	10" Tru Flo Drain Cover - Gray	**
	642-2419-DKG VB	10" Tru Flo Drain Cover - Dark Gray	**
	642-2419-BEI VB	10" Tru Flo Drain Cover - Beige	**

Vinyl Liner Drain Cover Kit

Item	Part No.	Description	Qty	List (US $)
	640-2260 VB	Vinyl Liner Tru Flo Kit VGB2008 - White	25 (indiv.)	**
	640-2261 VB	Vinyl Liner Tru Flo Kit VGB2008 - Black	25 (indiv.)	**
	640-2267 VB	Vinyl Liner Tru Flo Kit VGB2008 - Gray	25 (indiv.)	**

** Please request price quote.

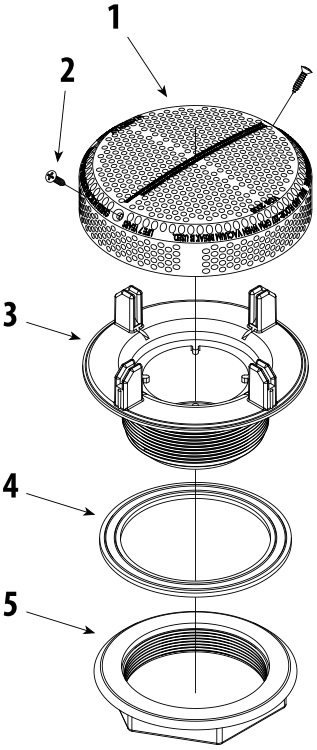

Super Hi-Flo Suction

Super Hi-Flo Suction Replacement Parts

Item	Part No.	Description	List (US $)
1	**642-3630B V**	Suction Cover	9.89
	819-1251	Suction Cover (Stainless Steel)	**
2	**819-1250B**	#6 Stainless Steel Screw - 20 x 5/8"	**
3	**215-3620B**	2" Wall Fitting (for 640-357x V)	12.27
	215-3610B	2 ½" Wall Fitting (for 640-358x V)	12.27
4	**711-3260B**	Gasket	1.65
5	**642-3620B**	Wall Fitting Nut	4.62

Ultra Hi-Flo Suction Replacement Parts

Item	Part No.	Description	List (US $)
1	**642-3270B V**	Tall Suction Cover	**
2	**819-0024B**	Stainless Steel Screw - #10 x 1"	1.27
3	**215-3270B**	1 ½" Wall Fitting for Tall Suction	**
4	**711-3250B**	Gasket	0.80
5	**718-3150B**	Wall Fitting Nut	**

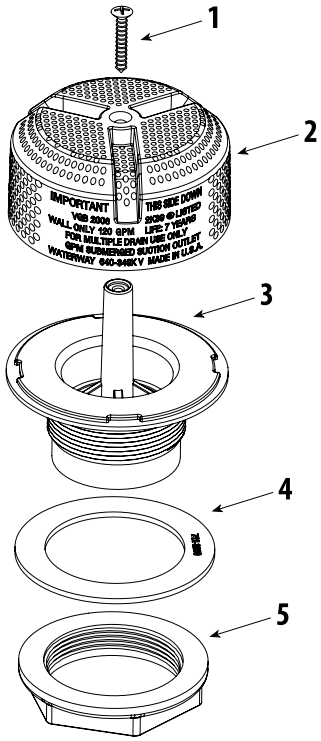

Ultra Hi-Flo Suction

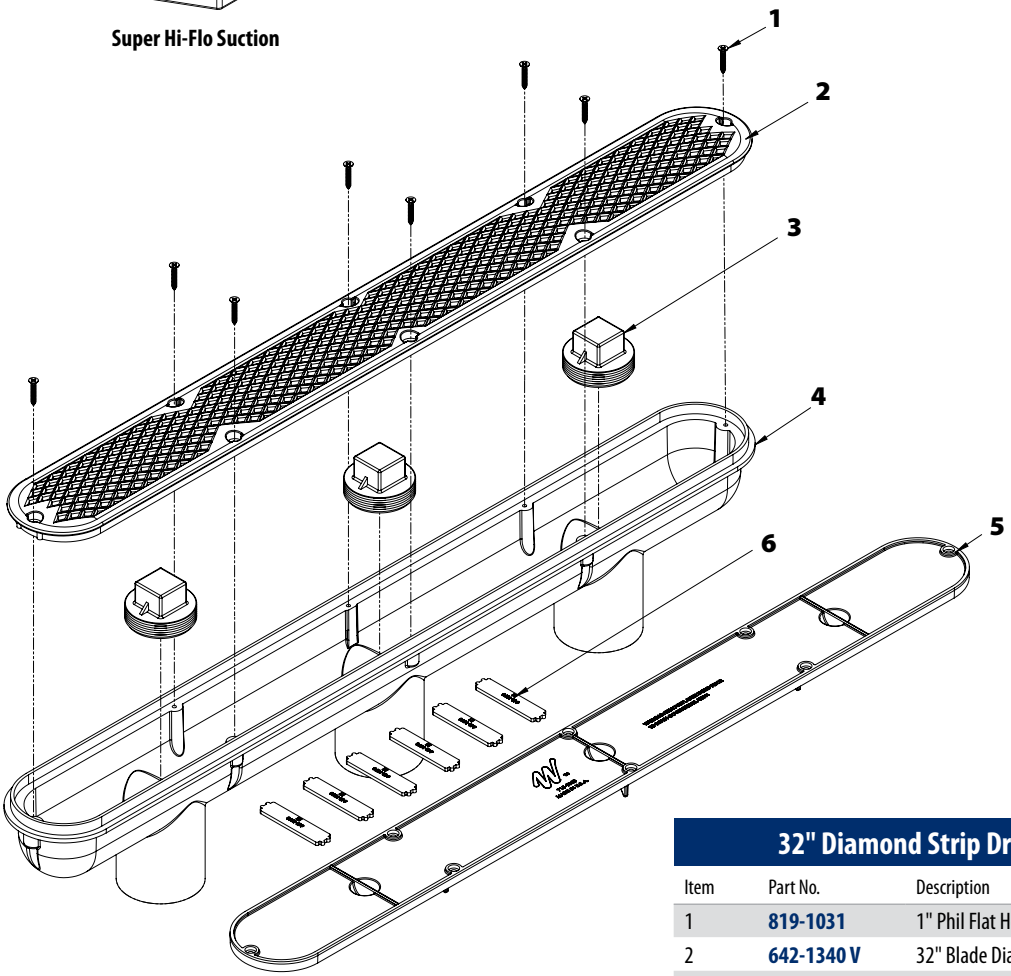

32" Diamond Strip Drain

32" Diamond Strip Drain Replacement Parts

Item	Part No.	Description	List (US $)
1	**819-1031**	1" Phil Flat Head Type A 316 S/S Screw	1.53
2	**642-1340 V**	32" Blade Diamond Design VBG2008	142.42
3	**715-9910**	2" NPT Plug	2.75
4	**642-1320**	32" Plaster Body Drain	213.62
5	**715-1360**	32" Plaster Plug	11.93
6	**642-1390**	32" Drain Support Brace	**

** Please request price quote.

New Style In-Line Chlorinator (2007 and Later) Replacement Parts

Item	Part No.	Description	List (US $)
1	**519-1160B**	Cap, Lid - In Line Chlorinator	**
2	**805-0348VB**	O-Ring	12.58
6	**515-1170B**	Upper Body, Chlorinator	40.26
7	**600-1287B**	Flow Valve Assembly	37.36
8	**421-4070B**	Reducer Bushing 2" SPG x1 1/2" S	3.36

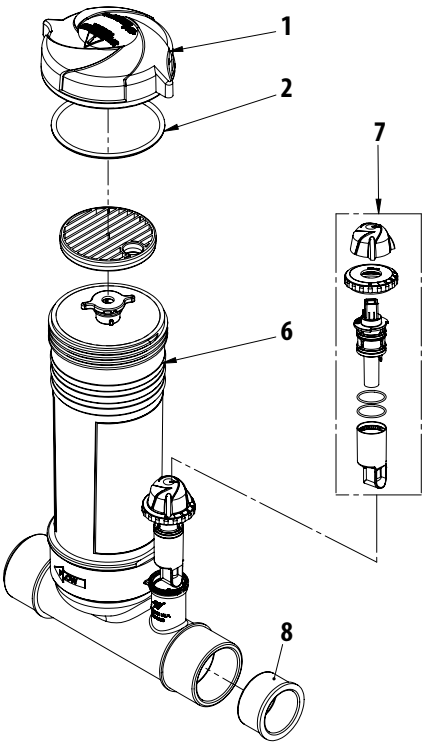

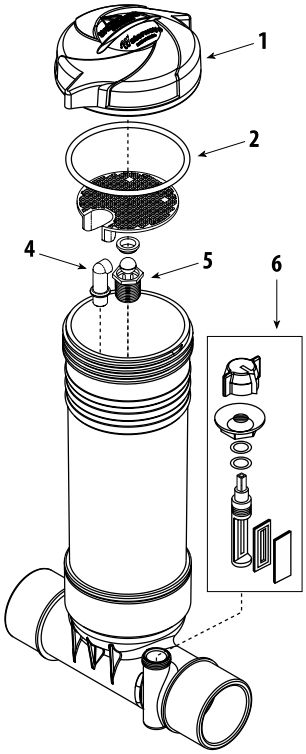

In-Line Chlorinator (2002 - 2007) Replacement Parts

Item	Part No.	Description	List (US $)
1	**519-1167B**	Lid	21.22
2	**805-0348VB**	Lid O-Ring	12.58
4	**411-1170B**	90° Elbow - ¼" Pipe	5.52
5	**600-1180B**	Flow Valve Assembly	12.24
6	**600-1190B**	Stem Assembly with O-Ring	26.96

In-Line Chlorinator (2002 and Previous) Replacement Parts

Item	Part No.		Description	List (US $)
1	**519-1181B**		Lid	**
2	**805-0340VB**		O-Ring - Lid	**
3	**319-0041B**		Filter Screen	**
4	**600-0051B**		Valve Stem Assembly	**
5	**421-4070B**		Reducer - 1 ½" Socket x 2" Spigot	3.36
6	**400-0021B**	**DISCONTINUED**	Elbow Assembly - ½" NPT x ½" Barb	**
7	**872-2290B**		½" Hose Clamp	3.14
8	**519-7361B**		3" Flex Hose	4.25
9	**550-2120B**		Coupler Assembly	**
10	**550-2130B**		Bromine Conversion Assembly for 1" Tablets	**

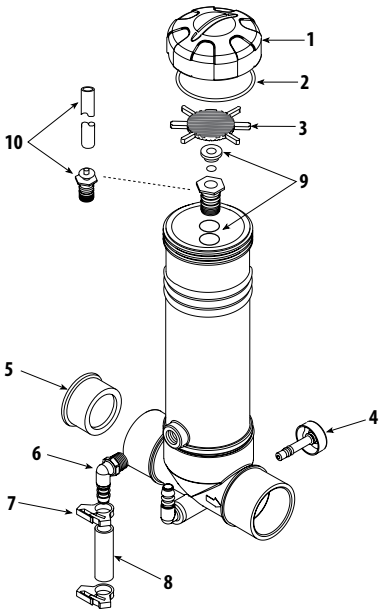

** Please request price quote.

Replacement Parts / **Off-Line and Above Ground Chlorinators**

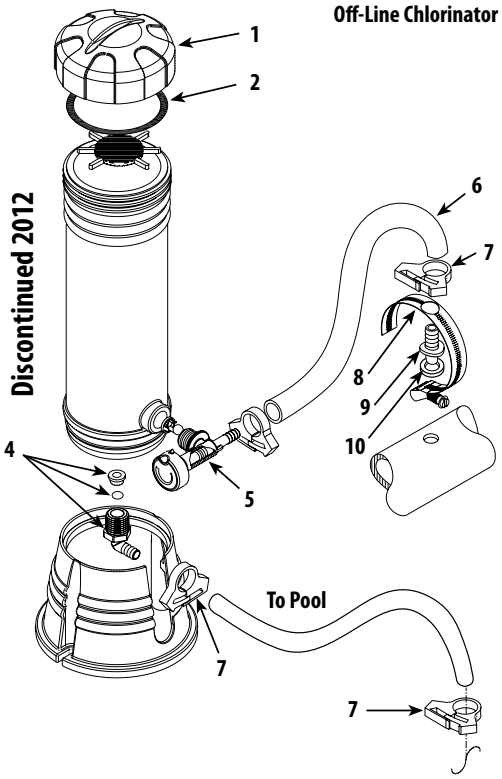

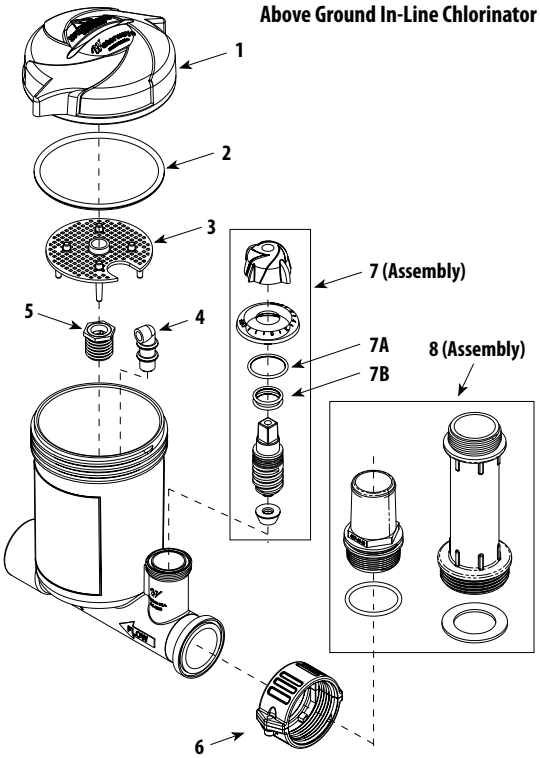

Off-Line Chlorinator Replacement Parts

Item	Part No.	Description	List (US $)
1	**519-1181B**	Lid	**
2	**805-0340VB**	O-Ring - Lid	**
4	**600-1151B**	Bottom Check Valve Assembly	**
5	**600-0101B**	Off-Line Valve Assembly	**
6	**872-2240B**	⅜" inner diameter x ½" outer diameter Tubing (per ft.)	**
7	**872-2291B**	⅜" Hose Clamp	2.01
8	**872-0011B**	2 ½" Hose Clamp - Stainless Steel	**
9	**425-1181B**	⅜" Pipe Adapter	**
10	**806-0003B**	Gasket	**

Above Ground In-Line Chlorinator Replacement Parts

Item	Part No.	Description	List (US $)
1	**519-1167B**	Lid	21.22
2	**805-0348VB**	O-Ring - Lid	12.58
3	**519-1250B**	Filter Screen - 1 ½"	7.78
4	**411-1170B**	90° Elbow - ¼"	5.52
5	**600-1180B**	Check Valve Assembly	12.24
6	**400-5461B**	1 ½" Split-Nut Union Assembly (with Screws)	6.27
7	**600-1207B**	Dial Stem Assembly	26.96
7A	**805-0124VB**	O-Ring - Stem Assembly	5.68
7B	**805-0118VB**	O-Ring - Stem Assembly	5.26
8	**400-9820B**	Chlorinator Fitting - 1 ½" Sub Assembly	20.23

** Please request price quote.

Index

2019

Part No.	Page
3J10070-0E	224
3M21621-1W	22, 220
3R10850-0D	217
3R11250-0D	217
3R11250-0V	217
3R20850-0D	217
3R21050-0D	217
3R21050-0V	217
110-016W	8
110-016WB	119
110-016WP	8
110-016WPB	119
110-0100B	119
110-0100PB	119
110-0110B	119
110-0110PB	119
110-0120	8
110-0120B	119
110-0120P	8
110-0120PB	119
110-0140	8
110-0140B	119
110-0140P	8
110-0140PB	119
110-0150	8
110-0150B	119
110-0150P	8
110-0150PB	119
120-0110	8
120-0110B	119
120-0110P	8
120-0110PB	119
120-0120	8
120-0120B	119
120-0120P	8
120-0120PB	119
120-0130	8
120-0130B	119
120-0130P	8
120-0130PB	119
120-0140	8
120-0140B	119
120-0140P	8
120-0140PB	119
120-0150	8
120-0150B	119
120-0150P	8
120-0150PB	119
120-0160	8
120-0160B	119
120-0160P	8
120-0160PB	119
120-0170	8
120-0170B	119
120-0170P	8
120-0170PB	119
120-0180	8
120-0180B	119
120-0180P	8
120-0180PB	119
120-0250	8
120-0250B	119
120-0250P	8
120-0250PB	119
125-0110	8
125-0110B	119
125-0110P	8
125-0110PB	119
125-0120	8
125-0120B	119
125-0120P	8
125-0120PB	119
130-0110B	119
130-0110PB	119
130-0120B	119
130-0120PB	119
130-0130B	119
130-0130PB	119
130-0210B	119
130-0210PB	119
210-0828S	155
210-0838S	155
210-0848S	155
210-1861	191
210-3247	75
210-3330	77
210-3400	78
210-3410G	83
210-3420G	83
210-3910	156
210-3910S	156
210-3920	156
210-3920G	85
210-3920S	156
210-3950	85
210-3970	85
210-4100	78
210-4110	78
210-4120	78
210-4130	78
210-4390	153
210-4390S	153
210-4400S	152
210-4410S	152
210-5100	157
210-5100S	157
210-5100SL	157
210-5830	122
210-5860	122
210-5870	122
210-5910	122
210-5937	122
210-5950	122
210-6040	122
210-7130S	152
210-7150S	152
210-7170S	152
210-7180S	152
210-7260S	156
210-7270S	156
210-7300	156
210-7310	156
210-7350	85
210-7430	156
210-7440	156
210-7900	154
210-7900S	154
210-7908	154
210-7908S	154
210-7910	154
210-7910S	154
210-7918	154
210-7918S	154
210-8160S	152
210-8270S	152
210-8280S	152
210-8290S	152
210-8750	122
210-9200	183
210-9258S	183
210-9268S	183
210-9278S	183
210-9288S	183
210-9308S	183
210-9318S	183
210-9500	122
210-9790	122
210-9980S	183
211-0380	121
211-3040	80, 81, 82
211-3050	78
211-3060	80, 81, 82
212-0090	121
212-0500	121
212-0500G	121
212-0540	121
212-0550	121
212-0560	121
212-0580	121
212-0590	121
212-0690	121
212-1800	177
212-1810	207
212-1820	207
212-1831	207
212-2190	120
212-2190S	120
212-2890S	120
212-3300	77
212-3310	77
212-3330*	77
212-3340*	77
212-3350*	77
212-3360	77
212-3370	77
212-3440	77
212-3450	77
212-3470	77
212-3500	77
212-3510	77
212-4150	121
212-4700	80, 81, 82
212-8400	120
212-8810	120
212-8830	120
212-9170	75
212-9171	75
212-9177	75
212-9179-BEI	75
212-9179-DKG	75
212-9870	120
212-9890S	120
212-9900S	120
212-9960S	120
215-1050	78
215-1060	78
215-1170	80
215-1190	81
215-1191	81
215-1197	81
215-3270B	346
215-3610B	346
215-3620B	346
215-8200	102
215-8210	102
215-8220	102
215-8230	102
215-8240	102
215-8250	102
215-8270	102
215-8280	102
215-9150	70
215-9150B	70
215-9151	70
215-9157	70
215-9159-BEI	70
215-9159-DKB	70
215-9159-DKG	70
215-9170	70
215-9170B	70
215-9171	70
215-9177	70
215-9179-BEI	70
215-9179-DKG	70
215-9820	120
215-9830	120
215-9840	120
215-9860	120
215-9880	70
215-9881	70
215-9887	70
215-9889-DKG	70
215-9890	70
215-9891	70
215-9897	70
215-9899-DKG	70
215-9900	120
215-9950	120
215-9960	120
217-0047	149
217-0057	149
217-0060	73, 113
217-1060	78
217-3320	77
217-3330	77
217-3340	77
217-3350	77
217-7300	156
217-7320	156
218-1430	74
218-1431	74
218-1437	74
218-1440	74
218-1441	74
218-1447	74
218-1449-BEI	74
218-1449-DKB	74
218-1449-DKG	74
218-1500	78
218-1570A	156
218-1770A	123
218-1960A	80, 82
218-4010	149
218-4360	153
218-5150	149
218-6680	149
218-6680B	325
218-6680T	149
218-7650	82
218-7657	82
218-9118	149
218-9128	149
218-9138	149
218-9148	149
218-9158	149
218-9168	149
218-9230	177
218-9428	149
218-9438	149
218-9448	149
218-9460	149
219-1060	78
223-0010	151
224-1000G	78
224-1001G	78
224-1007G	78
224-1040G	78
224-5710S	84
224-6700S	84
224-9540S	152
224-9550S	152
228-0010	125
228-0020	125
228-0040	125
228-0300	125
228-0330	125
228-0340	125
228-0380	125
228-0390	125
228-0400	125
228-0410	125
228-0430	125
228-1550G	125
228-1560G	125
228-1570G	125
228-1720G	125
228-2000	151
228-2000G	151
228-2010	151
228-2010G	151
228-2130	151
228-2130G	151
228-6710	82
229-0010	144
229-0020	147
229-0030	80, 147
229-0040	144
229-0040S	144
229-0080	144
229-0080S	144
229-0090S	144
229-0120	142
229-0120S	142
229-0130	138
229-0130S	138
229-0140	134
229-0140S	134
229-0150	144
229-0150S	144
229-0160	144
229-0160S	144
229-0170	142
229-0170S	142
229-0180	138
229-0180S	84, 138
229-0190	134
229-0190S	134
229-0210	134
229-0210S	134
229-0220	134
229-0220S	134
229-0230	134
229-0230S	134
229-0240	134
229-0240S	134
229-0310	144
229-0310S	144
229-0320	134
229-0320S	134
229-0330	134
229-0330S	134
229-0410	135
229-0410S	135
229-0440	135
229-0440S	135
229-0450	135
229-0450S	135
229-0460	135
229-0460S	135
229-0480	135
229-0480S	135
229-0610	135
229-0610S	135
229-0620	135
229-0620S	135
229-1000	80
229-1010	80
229-1100	81
229-1101	81
229-1107	81
229-1110	81
229-1111	81
229-1117	81
229-1200	82
229-1210	82
229-1320	85
229-1430	142
229-1430S	142
229-1440	138
229-1440S	138
229-1460	142
229-1460S	142
229-1470	138
229-1470S	138
229-1540	147
229-1590	147
229-1670	134
229-1670S	134
229-1770	138
229-1770S	138
229-1780	134
229-1780S	134
229-1790	134
229-1790S	134
229-1900	145
229-1900S	145
229-1920	142
229-1920S	142
229-1930	138
229-1930S	84, 138
229-1940	134
229-1940S	134

Part No.	Page
229-1970	143
229-1970S	143
229-1980	139
229-1980S	139
229-1980SG	84
229-1990	135
229-1990S	135
229-2000S	150
229-2020	151
229-2030	151
229-2030S	150, 151
229-2050	151
229-2060	151
229-2060S	150, 151
229-2090S	150
229-2100	144
229-2100S	144
229-2400S	136
229-2410S	136
229-2420S	136
229-2430S	136
229-2440S	136
229-2480S	136
229-2500S	137
229-2510S	137
229-2520S	137
229-2530S	137
229-2540S	137
229-2580S	137
229-2620S	137
229-2630S	137
229-2640S	137
229-2650S	137
229-2690S	137
229-2700S	136
229-2710S	136
229-2720S	136
229-2730S	136
229-2740S	136
229-2750S	136
229-2760S	136
229-2770S	136
229-2780S	137
229-2790S	137
229-2800S	136
229-2810S	136
229-2820S	136
229-2830S	137
229-2840S	137
229-2880S	136
229-2900S	150
229-2910S	150
229-2940S	136
229-2950S	137
229-2960S	137
229-3020S	150
229-3040S	150
229-3050S	150
229-3060S	150
229-3200	138
229-3200S	84, 138
229-3210S	84
229-3220S	84
229-3240	138
229-3240S	84, 138
229-3250	142
229-3250S	142
229-3260	142
229-3260S	142
229-3270	142
229-3270S	142
229-3280	142
229-3280S	142
229-3357	149
229-3620	142
229-3620S	142
229-4020	134
229-4020S	134
229-4030	134
229-4030S	134
229-4040	135
229-4040S	135
229-4050	135
229-4050S	135
229-4090	134
229-4090S	134
229-5310S	147
229-5320S	147
229-5410S	147
229-5420S	147
229-5430S	147
229-5440S	147
229-5480	147
229-5480S	147
229-5510S	147
229-5520S	147
229-5530S	147
229-5580S	147
229-5610 S	147
229-5630S	147
229-5640S	147
229-5650S	147
229-5710S	150
229-5800S	150
229-6170	135
229-6170S	135
229-6350	135
229-6350S	135
229-6360	135
229-6360S	135
229-6380	135
229-6380S	135
229-6437G	82
229-6610	145
229-6630	145
229-6650	145
229-6710	143
229-6710S	143
229-6720	135
229-6720S	135
229-6740S	133
229-6840S	146
229-6850S	146
229-7090	143
229-7090S	143
229-7140	143
229-7140S	143
229-7150	143
229-7150S	143
229-7160	143
229-7160S	143
229-7250	139
229-7250S	139
229-7250SG	84
229-7310S	146
229-7320S	146
229-7330S	146
229-7360S	146
229-7380S	146
229-7390S	146
229-7450S	146
229-7480S	146
229-7550	139
229-7550S	139
229-7550SG	84
229-7560	139
229-7560S	139
229-7560SG	84
229-7570SG	84
229-7580SG	84
229-7590	139
229-7590S	139
229-7590SG	84
229-7600	147
229-7600G	82
229-7600S	145
229-7601G	82
229-7607G	82
229-7610	147
229-7610G	82
229-7610S	145
229-7611G	82
229-7617G	82
229-7630	147
229-7630G	82
229-7631G	82
229-7637G	82
229-7680	135
229-7680S	135
229-7690	143
229-7690S	143
229-7700	139
229-7700S	139
229-7700SG	84
229-7720	139
229-7720S	139
229-7740	147
229-7740G	82
229-7740S	145
229-7741G	82
229-7747G	82
229-7757	149
229-7757G	82
229-7800S	144
229-7810	144
229-7840	144
229-7840S	144
229-7900	144
229-7920	80, 147
229-7920S	144
229-7930	80
229-7940	144
229-7950	80, 147
229-7950S	144
229-8000	145
229-8010	81
229-8010S	145
229-8011	81
229-8011-BEI	81
229-8011-DK	81
229-8017	81
229-8020	145
229-8030	81
229-8030S	145
229-8031	81
229-8031-BEI	81
229-8031-DK	81
229-8037	81
229-8040	145
229-8050	81
229-8050S	145
229-8051	81
229-8051-BEI	81
229-8051-DK	81
229-8057	81
229-8120	81
229-8120S	145
229-8121	81
229-8121-BEI	81
229-8121-DK	81
229-8127	81
229-8130	145
229-8140	145, 147
229-8140S	145
229-8150	145
229-8150S	145
229-8160	145, 147
229-8160S	145
229-8170	145, 147
229-8170S	145
229-8230	145
229-8230S	145
229-8270S	145
229-8280	145
229-8290	145, 147
229-8290S	145
229-8440	134
229-8440S	134
229-8450	134
229-8450S	134
229-8570	138
229-8570S	84, 138
229-8580	138
229-8580S	84, 138
229-8590	138
229-8590S	84, 138
229-8630	138
229-8630S	84, 138
229-8640	138
229-8640S	84, 138
229-8650	138
229-8650S	84, 138
229-8660	138
229-8660S	84, 138
229-8670S	84
229-8700	138
229-8700S	84, 138
229-8790	142
229-8790S	142
229-8850	142
229-8850S	142
229-8860	142
229-8860S	142
229-8870	142
229-8870S	142
229-9000S	140
229-9010S	140
229-9020	142
229-9020S	142
229-9040	134
229-9040S	134
229-9060S	140
229-9070S	140
229-9100S	140
229-9130S	140
229-9140S	140
229-9150S	140
229-9160S	140
229-9180S	140
229-9190S	140
229-9200S	140
229-9210S	140
229-9220S	140
229-9230S	140
229-9260S	140
229-9280S	140
229-9290S	140
229-9300S	141
229-9310S	141
229-9330S	141
229-9350S	141
229-9370S	141
229-9380S	141
229-9400S	141
229-9420S	141
229-9430S	141
229-9450S	141
229-9460S	141
229-9480S	141
229-9490S	141
229-9510	142
229-9510S	142
229-9520	138
229-9520S	84, 138
229-9530	134
229-9530S	134
229-9600	145
229-9600S	145
229-9610	142
229-9610S	142
229-9620	138
229-9620S	84, 138
229-9630	135
229-9630S	135
229-9640S	141
229-9720	147
229-9720S	147
229-9730	142
229-9730S	142
229-9790	145
229-9790S	145
235-7150	152
235-8160	152
239-0010S	150
239-0020S	150
239-0100	128
239-0100S	128
239-0110	128
239-0110S	128
239-0120	128
239-0120S	128
239-0130	128
239-0130S	128
239-0150S	150
239-0300	128
239-0300S	128
239-0310	128
239-0310S	128
239-0320	128
239-0320S	128
239-0330	128
239-0330S	128
239-0340	128
239-0340S	128
239-0350	128
239-0350S	128
239-0360	128
239-0360S	128
239-0500	128
239-0500S	128
239-0510	128
239-0510S	128
239-0520	128
239-0520S	128
239-0530	128
239-0530S	128
239-0540	128
239-0540S	128
239-0550	128
239-0550S	128
239-0560	128
239-0560S	128
239-0620	129
239-0620S	129
239-0630	129
239-0630S	129
239-0640	129
239-0640S	129
239-0650	129
239-0650S	129
239-0660	129
239-0660S	129
239-0670	129
239-0670S	129
239-0749-DSGPS	121
239-0759-DSGS	121
239-0771S-DSGPS	121
239-0800S	146
239-0830S	146
239-0900S	146
239-0910S	146
239-1500	132
239-1500S	132
239-1510	132
239-1510S	132
239-1520	132
239-1520S	132
239-1530	132
239-1530S	132
239-1700S-DSG	130
239-1710S-DSG	130
239-1720S-DSG	130
239-1730S-DSG	130
239-1740S	150
239-1750S	150
239-1800S	130
239-1810S	130
239-1820S	130
239-1830S	130
239-1900S	131
239-1910S	131
239-1950S	131

Part No.	Page
239-2300	132
239-2300S	132
239-2310	132
239-2310S	132
239-2320	132
239-2320S	132
239-2330	132
239-2330S	132
239-2340	132
239-2340S	132
239-2350	132
239-2350S	132
239-2360	132
239-2360S	132
239-3100S	130
239-3110S	130
239-3120S	130
239-3130S	130
239-3140S	130
239-3150S	130
239-3160S	130
239-3300S	130
239-3310S	130
239-3320S	130
239-3330S	130
239-3340S	131
239-3350S	131
239-3360S	131
239-4000S	127
239-4010S	127
239-4020S	127
239-4030S	127
239-4100S	127
239-4110S	127
239-4120S	127
239-4130S	127
239-4200S	127
239-4210S	127
239-4220S	127
239-4230S	127
239-4240S	127
239-4250S	127
239-4260S	127
239-4300	144
239-4300S	144
239-4310	144
239-4310S	144
239-4320	144
239-4320S	144
239-4330	144
239-4330S	144
239-4340	144
239-4340S	144
239-4350	144
239-4350S	144
239-4370	147
239-4370S	147
239-4400S	127
239-4410S	127
239-4420S	127
239-4430S	127
239-4440S	127
239-4450S	127
239-4460S	127
239-4700S	127
239-4720S	127
239-4730S	127
239-4740S	127
239-4750S	127
239-4760S	127
239-4770S	127
239-4900S	127
239-4910S	127
239-4920S	127
239-4930S	127
239-4940S	127
239-4950S	127
239-4960S	127
239-5000	139
239-5000S	139
239-5010	139
239-5010S	139
239-5020	139
239-5020S	139
239-5030	139
239-5030S	139
239-5040	139
239-5040S	139
239-5050	139
239-5050S	139
239-5060	139
239-5060S	139
239-5080S	150
239-5090S	150
239-6110	133
239-6110S	133
239-6120	133
239-6120S	133
239-6130	133
239-6130S	133
239-6140	133
239-6140S	133
239-6150	133
239-6150S	133
239-6160	133
239-6160S	133
239-6740	133
239-7090	145
239-7090S	145
239-7710	133
239-7710S	133
239-7730S	141
239-7740	135
239-7740S	135
239-7750S	137
239-7760	143
239-7760S	143
239-7770	129
239-7770S	129
239-8200	133
239-8200S	133
239-8210	133
239-8210S	133
239-8220	133
239-8220S	133
239-8230	133
239-8230S	133
239-8240	133
239-8240S	133
239-8250	133
239-8250S	133
239-8260	133
239-8260S	133
239-8300	132
239-8300S	132
239-8310	132
239-8310S	132
239-8320	132
239-8320S	132
239-8330	132
239-8330S	132
239-8340	132
239-8340S	132
239-8350	132
239-8350S	132
239-8360	132
239-8360S	132
310-0140	226
310-0700	226
310-0800	226
310-0810	226
310-0900B	298
310-1020B	294
310-1030B	294
310-1040B	294
310-1050B	294
310-1060B	294
310-1130SD	226
310-1140SD	226
310-1141SD	226
310-1150SD	226
310-1160SD	226
310-1440	226
310-1460	226
310-1480	226
310-1500	226
310-1510	226
310-1710	226
310-1720	226
310-1730	226
310-1740	226
310-1750	226
310-1800	226
310-1810	226
310-1820	226
310-1830	226
310-1840	226
310-1850	226
310-1860	226
310-1870	226
310-1880	226
310-1890	226
310-1900	226
310-1910	226
310-1920	226
310-1930	226
310-2200B	297
310-2260B	297
310-2270B	297
310-2300B	296
310-2330B	296
310-2340B	296
310-2350B	296
310-2360	226
310-2370	226
310-2380	226
310-2390	226
310-2450	226
310-2460	226
310-2480	226
310-2620B	297
310-3000	54
310-3010	54
310-3010-SS	54
310-3020	54
310-3030	54
310-3030-SS	54
310-3040	54
310-3050	54
310-3050-SS	54
310-3060	54
310-3070	54
310-3080	54
310-3090	54
310-3100	54
310-3300B	275, 277
310-3500	54
310-3510	54
310-3520	54
310-3530	54
310-3540	54
310-3550	54
310-3560	54
310-3570	54
310-3580	54
310-3650B	275, 277
310-3660B	275, 277
310-3670B	275, 277
310-3680B	275, 277
310-3990B	290, 291
310-4000B	290, 291, 300
310-4010B	290, 291, 300
310-4020B	300
310-4030B	290, 291, 300
310-4050B	300
310-4060B	298
310-4070B	298
310-4090B	298
310-4180B	295
310-4190B	295
310-4200B	295
310-4210B	295
310-4220B	295
310-4230B	295
310-5080	54
310-5080B	288, 289
310-5090	54
310-5090B	288, 289
310-5100	54
310-5100B	288, 289
310-5110B	293
310-5120B	293, 302
310-5130B	293, 302
310-5140B	293, 302
310-5200B	293, 302
310-5400	54, 224
310-5400B	315
310-6500	54
310-6600	54
310-7400B	287
310-7410B	287
310-7420B	287
310-7430B	279, 287
310-7440B	287
310-7450B	283, 287
310-7470B	279, 283, 285, 287
310-7500B	285
310-7510B	285
310-7520B	285
310-7530B	285
310-7700SD	54, 227
310-7710SD	54, 227
310-7720SD	54, 227
310-7730SD	54, 227
310-7740SD	54, 227
310-7800	54, 227
310-7810	54, 227
310-7820	54, 227
310-7830	54, 227
310-7840	54, 227
310-8000B	290, 292, 299, 301
310-8010B	290, 292, 299, 301
310-8020B	290, 292, 299, 301
310-8030B	290, 292, 299, 301
310-8040B	290, 292, 299, 301
310-8200	54, 226
310-8210	54, 226
310-8220	54, 226
310-8230	54, 226
310-8240	54, 226
310-8400B	271, 273
311-1060B	298
311-1070B	292
311-1110B	293, 302
311-1210B	295
311-1220B	294, 295
311-1400B	275, 277
311-1450B	279, 283, 285, 287
311-1510B	297
311-1520B	288, 289
311-2140B	290, 291, 300
311-2160B	299
311-2170B	290, 301
311-2311B	296
311-8300B	271, 273
313-1400B	293, 294, 300, 302
313-3210B	297
315-1050B	293
315-1060B	298
315-1070B	292
315-1120B	293, 302
315-1220B	295
315-1240B	294, 295
315-1300B	275, 277
315-1400B	285, 287
315-1500B	297
315-1510B	288, 289
315-2301B	296
315-2500B	290, 291, 300
315-2510B	299
315-2520B	290, 301
315-8300B	271, 273
319-0019	228
319-0041B	347
319-1270B	296
319-1310B	275, 277
319-1370B	295
319-1380B	294, 295
319-1390B	291, 300
319-1420B	279, 283, 285, 287
319-1430B	279, 283, 285, 287
319-1500B	279, 283, 285, 287
319-1510B	288, 289
319-1530B	288, 289
319-1540B	288, 289
319-1550B	288
319-1560B	289
319-1630B	279, 283, 285, 287
319-1700B	279, 283, 285, 287
319-2160B	293
319-2170B	290, 291
319-3010B	289
319-3090B	288, 290, 292, 296, 297, 298, 299, 301
319-3100B	275, 277, 279, 283, 285, 287, 290, 291, 293, 294, 295, 300, 302
319-3210B	294
319-3230B	290, 291, 293
319-3260B	294
319-3290B	271, 273
319-3500B	289, 291
319-3510B	289, 291
319-3520B	291
319-3530B	291
319-4100	290, 291
319-4100B	279, 283, 285, 287, 293
319-5300B	294
350V120-1	279
350VS20-1	287
400-0021B	347
400-662xB	79
400-1300	75
400-1360	75
400-1410A	71
400-1410AB	71
400-1410B	71
400-1410BB	71
400-1410C	71
400-1410CB	71
400-1410D	71
400-1410DB	71, 336
400-1410E	71
400-1410EB	71, 336
400-1410F	71
400-1410FB	71
400-1411A	71
400-1411B	71
400-1411C	71
400-1411D	71
400-1411DB	71
400-1411E	71
400-1411EB	71
400-1417A	71
400-1417AB	71
400-1417B	71
400-1417C	71
400-1417D	71

Part No.	Page
400-1417DB	71
400-1417E	71
400-1417EB	71
400-1419A-DK	71
400-1419B-DK	71
400-1419C-DK	71
400-1419D-BEI	71
400-1419D-DK	71
400-1419E-BEI	71
400-1419E-DK	71
400-1419E-DKB	71
400-1420A	72
400-1420D	72
400-1420DB	72
400-1420E	72
400-1420EB	72
400-1421D	72
400-1421E	72
400-1427A	72
400-1427D	72
400-1427E	72
400-1429A-DK	72
400-1429D-DK	72
400-1429E-DK	72
400-1940	59, 231
400-1990	59, 231
400-2000	61, 233
400-2010	231
400-2017	59
400-2020	59, 231
400-2060	257
400-2070	257
400-2100	257
400-3021	257
400-3031	257
400-3070	58
400-3090	58, 65
400-4000	61, 233
400-4020	61, 233
400-4030	61, 233
400-4060	59, 231
400-4061B	321, 323
400-4100	241
400-4130	230
400-4140	79, 115
400-4141	79, 115
400-4147	79, 115
400-4149-BEI	79, 115
400-4160	58
400-4230	59, 231
400-4240	59, 231
400-4260	241
400-4300	60, 232
400-4360	254
400-4420	254
400-4481-CPVC	58, 232
400-4510	59, 231
400-5050	61, 233
400-5080	58
400-5090	58
400-5161	237
400-5161B	290
400-5200	58, 65
400-5301B	294
400-5461	236
400-5461B	348
400-5491	236
400-5530	61, 233
400-5540	254
400-5570	60, 232
400-5580	254
400-5640	59, 231
400-5660	60, 232
400-5670	60, 232
400-5680	60, 232
400-5800	60, 232
400-5961-2B	314
400-5971B	60, 232
400-5990	60, 232
400-6000	61, 233
400-6010	60, 232
400-6021B	60, 232
400-6040	254
400-6437	38
400-6600	79
400-6600-100	79
400-6601	79
400-6601-100	79
400-6601B	307, 311
400-6610B	311
400-6621B	307, 311
400-6650	79
400-6651	79
400-7390	74
400-8300	73
400-8310	73
400-8320	73
400-9010B	74
400-9030	207
400-9060B	74
400-9061B	74
400-9067B	74
400-9090	85
400-9120	207
400-9130	207
400-9140	207
400-9150	70, 207
400-9150B	70
400-9151	70
400-9157	70
400-9160B	74
400-9161B	74
400-9167B	74
400-9170	70
400-9170B	70, 336
400-9171	70
400-9171B	70
400-9177	70
400-9177B	70
400-9180	76
400-9181	76
400-9187	76
400-9189-DKG	76
400-9190	76
400-9190P	76
400-9191	76
400-9191P	76
400-9197	76
400-9197P	76
400-9199-BEI	76
400-9199-DKG	76
400-9199P-DK	76
400-9220	207
400-9230	60, 232
400-9240	60, 232
400-9280	59, 231
400-9290	113
400-9291	113
400-9292	113
400-9297	113
400-9299-BEI	113
400-9299-DKG	113
400-9390	76
400-9390P	76
400-9397	76
400-9397P	76
400-9470	73
400-9820	65
400-9820B	348
400-9900B	315
400-9974B	311
411-0350	252
411-0360	252
411-1170B	347, 348
411-2000	68, 239
411-2010	68, 239
411-2020	68, 239
411-2100	68, 239
411-2200	68, 239
411-3480	252
411-3490	252
411-3500	252
411-3700	252
411-4000	68, 239
411-4010	68, 239
411-4040	68, 239
411-4050	68, 239
411-4060	252
411-4080	68, 239
411-4160	252
411-5030	68, 239
411-5040	68, 239
411-5050	68, 239
411-5060	68, 239
411-5080	68, 239
411-5520	254
411-5540	254
411-5550	68, 239
411-6040	254
411-6520	69
411-6540	69
411-6910B	327
411-9100	67, 238
411-9110	67, 238
411-9120	67, 238
411-9130	67, 238
411-9140	67, 238
411-9150	67, 238
411-9160	67, 238
411-9170	68, 239
411-9180	68, 239
411-9200	67, 238
411-9210	67, 238
413-1201	249
413-1770	241
413-1800	252
413-1810	242
413-1820	242
413-1850	252
413-1860	252
413-1900	249
413-1920	252
413-1940	249
413-1960	252
413-1980	240
413-2000	240
413-2020	242
413-2030	240
413-2060	240
413-2080	240
413-2090	240
413-2120	240
413-2130	240
413-2140	240
413-2150	240
413-2160	237
413-2180	240
413-2210	240
413-2320	68, 91, 241
413-3010	240
413-4000	240
413-4100	242
413-4130	242
413-4140	242
413-4160	242
413-4180	168
413-4200	168
413-4350	249
413-4360	252
413-4370	252
413-4400	257
413-4410	257
413-4510	252
413-5030	240
413-5040	242
413-5080	242
415-4000	62, 234
415-4000B	337
415-4001B	315, 321, 323
415-4021	236
415-4051B	293
415-4061B	279, 283, 285, 287
415-4211B	27, 311
415-5000	63, 235
415-5001	312, 313
415-5001B	294
415-5091-CPVCB	309
415-5161	237
415-5201B	291
415-6000	63, 235
415-6001B	275, 277
417-2000	234
417-2090	237
417-2111B	279, 283, 285, 287
417-2121-CPVCB	279, 283, 285, 287
417-2201B	27, 311
417-4000	62, 234
417-4001B	315
417-4010	62, 234
417-4020	62
417-4030	62, 234
417-4050	236
417-4060	62, 234
417-4070	62, 234
417-4080	62, 234
417-4090	236
417-4100	62, 234
417-4110	62, 234
417-4161	39
417-4161B	321, 323
417-4220	63, 235
417-5020	63, 235
417-5040	63, 235
417-5050	237
417-5060	237
417-5080	62, 234
417-5090	63, 235
417-5120	63, 235
417-5121B	294
417-5130	235
417-5130B	294
417-5140	237
417-5160	237
417-5180	237
417-5260	63, 235
417-5500	62, 234
417-5970	63, 235
417-5971B	275, 277
417-5980	237
417-6000	63, 235
417-6001B	275, 277
417-6010	63, 235
417-6020	234
417-6020B	337
417-6030	63, 235
417-6040	234
417-6041	62
417-6041B	315
417-6050	63, 235
417-6060	69
417-6060B	336, 337
417-6061	69
417-6061B	315, 338
417-6067	69
417-6080	69
417-6080B	339
417-6081	69
417-6127	255
417-6137	255
417-6140	69, 253
417-6140B	336
417-6141	69
417-6147	69
417-6150	69
417-6150B	336
417-6151	69
417-6157	69
417-6160	69
417-6161	69
417-6167	69
417-6197	255
417-6241B	312, 313
418-1000	66
418-2000	66
418-3000	66
418-4000	66
418-5000	66
418-6000	66
418-7000	66
419-0900	253
419-1000	249
419-1920	253
419-4100	66
419-4110	66
419-4120	66
419-4201B	307, 311, 317
419-7241	312, 313
419-7251	312, 313
421-1000	255
421-1030	249
421-1050	255
421-3350	77
421-4010	255
421-4020	255
421-4030	255
421-4070	255
421-4070B	347
421-4071B	27, 311
421-4201B	27, 311
421-5000	255
423-4000	255
425-0210	249
425-1000	252
425-1010	253
425-1030	252, 253
425-1080	249
425-1090	250
425-1181B	348
425-1928B	321, 323, 325
425-4000	248
425-4020	249
425-4040	249
425-5010	249
425-5030	81
425-5070	80
425-5071	80
425-5077	80
429-2000	66
429-2010	66
429-3000	66
429-3010	66
429-3020	66
429-3030	66
429-4000	230
429-4010	114
429-4017	114
429-4019-BEI	114
429-4030	230
429-7100	113
429-7221B	312, 313
429-7300	28
429-7300B	321, 323
500-1000B	315, 328, 329
500-1021	207
500-1060B	328
500-1070B	328
500-1098	207
500-1901B	321, 323
500-2500	205
500-2510	205
500-2515B	315
500-2540	205
500-2550	205
500-2680B	330
500-2697B	332
500-5000	205
500-5010	205
500-5015B	315
500-5050	205

Part No.	Page
500-5300B	312, 313
500-5310B	307, 311
500-6010	205
500-6050	205
500-7310B	312, 314
500-7500	206
500-7510	206
500-7550	206
500-9900	206
500-9910	206
500-9950	206
502-2011B	321, 323, 325
502-2500	205
502-2510	205
502-2530	205
502-2550	205
502-5000	205
502-5010	205
502-5030	205
502-5050	205
502-7500	206
502-7510	206
502-7550	206
502-9900	206
502-9910	206
505-0161B	323, 325
505-0191B	323, 325
505-0221B	323, 325
505-0261B	323, 325
505-0271B	321
505-0281B	321
505-0291B	321
505-0301B	321
505-1010B	309
505-1020B	309
505-1030B	309
505-1040B	309
505-1060B	309
505-1930B	321, 323, 325
505-1950B	323, 325
505-1970B	321, 323, 325
505-2020B	321, 323, 325
505-2030B	321, 323, 325
505-2040B	323, 325
505-2050B	323, 325
505-2060B	323, 325
505-2070B	323, 325
505-2080B	323, 325
505-2140B	321
505-2150B	321
505-2160B	321
505-2180B	321
505-2240-RB	323
505-2250-RB	323
505-2260-RB	323
505-3000B	321, 323, 325
505-3010B	321, 323, 325
505-3020B	321
510-1500	199
510-1600	199
510-1650T	199
510-3520	203
510-3540	203
510-3550	203
510-3600	205
510-4520	203
510-4550	203
510-4570	202
510-4600	202
510-4620	202
510-4630	202
510-4680	202
510-6520	203
510-6540	203
510-6550	203
510-6620	200
510-6680	201
510-6900	198
510-6910	198
510-9020	200
510-9520	203
510-9540	203
510-9550	203
511-1000B	328
511-1010B	329
511-1310B	275, 277, 288, 289
512-0210	204
512-0270	204
512-2510	204
512-2550	204
512-2570	204
514-6550	204
514-6580	204
515-1010B	329
515-1170B	347
515-2041TB	317, 319
515-4207B	307
515-7250B	312, 313
519-0231	257
519-0300B	326
519-949xB	334
519-1051B	328
519-1160B	347
519-1167B	347, 348
519-1181B	347, 348
519-1250B	348
519-1600B	339
519-2010B	332
519-2031	208
519-2041	208
519-3010B	330, 337
519-3030B	336, 337
519-3080B	337
519-3090	112
519-3090B	336, 337
519-3091	112
519-3097	112
519-3100B	337
519-3150B	336, 337
519-3170B	337
519-3180B	336, 337
519-3190B	337
519-3240B	333, 334, 335
519-3250B	333, 334, 335
519-4020B	339
519-4030B	339
519-4090B	339
519-4110B	336, 337
519-4281B	307, 311
519-4320B	311
519-4370B	307, 311
519-5301B	317
519-5310B	317
519-5320B	317
519-5330SCB	317
519-5370B	317, 319, 321
519-5421B	317
519-6240B	340, 341
519-6420B	333, 334, 335
519-6450B	333, 334, 335
519-6460B	333
519-6460WWB	334, 335
519-6470B	333, 334, 335
519-6480	104, 107
519-6480B	334, 335
519-6480-R1	104
519-6480-R1B	334, 335
519-6550	107
519-6560	103, 104, 107
519-6560B	335
519-6561	104
519-6567	104, 107
519-6569-BEI	104
519-6569-DKG	104
519-6570B	103, 333
519-6610B	341
519-6630B	341
519-6640B	340, 341
519-6650B	341
519-6680B	341
519-6700	115
519-6710	115
519-6711	115
519-6717	115
519-6719-BEI	115
519-6900B	327
519-6940.LB	327
519-6940.RB	327
519-6951B	327
519-6961B	327
519-6970B	327
519-6981B	327
519-7269B	312
519-7361B	347
519-7400B	312, 313
519-7410B	312, 313
519-7420B	312, 313
519-7431B	312, 313
519-7441B	312, 313
519-7470B	312, 313
519-7491B	312
519-7601B	312, 313
519-8000B	330
519-8050B	330
519-8070B	330
519-8150B	332
519-8160B	332
519-8260B	331
519-8310B	326
519-9010B	340
519-9040B	340
519-9050B	340
519-9490	107
519-9500B	334, 335
519-9510	107
519-9510B	334, 335
519-9520	107
519-9521	107
519-9527	107
519-9530B	334, 335
519-9540	107
519-9547	107
519-9550B	334
519-9650B	333
520-5a157	33
520-1601	38
520-1601L	38
520-1610	47
520-1610-3	47
520-1700	47
520-1700-3	47
520-1910	47
520-1910-3	47
520-3010	39
520-3030	39
520-3040	39
520-4010	39
520-4040	39
520-4070	38
520-4070LT	38
520-5007	30
520-5007-3S	30
520-5007-6S	30
520-5027	30
520-5027-3S	30
520-5027-6S	30
520-5037-3S	30
520-5037-6S	30
520-5107	33
520-5107-3S	33
520-5107-6S	33
520-5127	33
520-5127-3S	33
520-5127-6S	33
520-5147-3S	33
520-5147-6S	33
520-5157-3S	33
520-5157-6S	33
520-5167	33
520-5167-3S	33
520-5167-6S	33
520-5187	33
520-5187-3S	33
520-5187-6S	33
520-5200	46
520-5200-3S	46
520-5200-6S	46
520-5220	46
520-5220-3S	46
520-5220-6S	46
520-5240	46
520-5240-3S	46
520-5240-6S	46
520-5260	46
520-5260-3S	46
520-5260-6S	46
520-5300-3S	42
520-5300-6S	42
520-5300-C25S	53
520-5320-3S	42
520-5320-6S	42
520-5320-C25S	53
520-5330-3S	42
520-5330-6S	42
520-5340-3S	42
520-5340-6S	42
520-5340-C25S	53
520-5350-3S	42
520-5350-6S	42
520-5360-6S	42
520-5360-C25S	53
520-5400-25S	52
520-5420-25S	52
520-5440-25S	52
520-5460-25S	52
520-6000-6S	37
520-6000-C25S	50
520-6100-6S	37
520-6100-C25S	50
520-6115-6S	37
520-6115-C25S	50
520-6215-6S	37
520-6215-C25S	50
520-6315-6S	37
520-6315-C25S	50
520-6415-6S	37
520-6415-C25S	50
520-6515-6S	37
520-6515-C25S	50
520-6520-6S	37
520-6520-C25S	50
520-7500-0	35
522-1610	47
522-1610-3	47
522-1700	47
522-1700-3	47
522-1910	47
522-1910-3	47
522-2980	39
522-3010	39
522-3030	39
522-3040	39
522-4010	39
522-4020	39
522-4030	39
522-4040	39
522-5007-3S	30
522-5007-6S	30
522-5027-3S	30
522-5027-6S	30
522-5037-3S	30
522-5037-6S	30
522-5107-3S	33
522-5107-6S	33
522-5127-3S	33
522-5127-6S	33
522-5147-3S	33
522-5147-6S	33
522-5157-3S	33
522-5157-6S	33
522-5167-3S	33
522-5167-6S	33
522-5187-3S	33
522-5187-6S	33
522-5200-3S	46
522-5200-6S	46
522-5220-3S	46
522-5220-6S	46
522-5240-3S	46
522-5240-6S	46
522-5260-3S	46
522-5260-6S	46
522-5300-3S	42
522-5300-6S	42
522-5320-3S	42
522-5320-6S	42
522-5330-3S	42
522-5330-6S	42
522-5340-3S	42
522-5340-6S	42
522-6000-6S	36
522-6100-6S	36
522-6115-6S	36
522-6215-6S	36
522-6315-6S	36
522-6415-6S	36
522-6515-6S	36
522-6520-6S	36
532-2010B	113
532-2011B	113
532-2013B	113
532-2017B	113
532-2019B-DK	113
535-2209-BRK	256
535-2209-CIN	256
535-2209-CSG	256
535-2209-GPH	256
535-2209-MOC	256
535-2209-RDW	256
535-2300	256
540-3160	114
540-3161	114
540-3167	114
540-3169-BEI	114
540-5300*	109
540-5300-9B	109
540-5301	109
540-5307	109
540-5309-BEI	109
540-5310*	109
540-5310-9B	109
540-5311	109
540-5317	109
540-5319-BEI	109
540-5320	109
540-5700	109
540-5710*	109
540-5717	109
540-5720*	109
540-5730*	109
540-5737	109
540-6010	104
540-6200	110
540-6350	110
540-6360	110
540-6410	104
540-6410-9B	104
540-6410-9SB	104
540-6410G	104
540-6410-LL	105
540-6411	104
540-6411-9B	104
540-6411-9SB	104
540-6411-LL	105
540-6411-S	104
540-6417	104
540-6417-9B	104
540-6417-9SB	104
540-6417-LL	105

Part No.	Page
540-6417-S	104
540-6419-BEI	104
540-6419BEI-LL	105
540-6419-DKG	104
540-6430	104
540-6460WW	105, 114
540-6461WW	105, 114
540-6467WW	105, 114
540-6469WW-B	105
540-6469WW-BEI	114
540-6469WW-D	105
540-6469WW-DKG	114
540-6470WWB	333
540-6480WW	105, 114
540-6487WW	105, 114
540-6489WW-B	105
540-6489WW-BEI	114
540-6490WWB	334, 335
540-6500	104, 107
540-6510	104
540-6510-9B	104
540-6510-9SB	104
540-6510-S	104
540-6511	104
540-6511-9B	104
540-6517	104
540-6517-9B	104
540-6519-BEI	104
540-6519-DKG	104
540-6610	104
540-6610-9B	104
540-6611	104
540-6617	104
540-6617-9B	104
540-6619-BEI	104
540-6619-DKG	104
540-6630	104
540-6700	115
540-6701	115
540-6707	115
540-6709-BEI	115
540-6710	115
540-6711	115
540-6717	115
540-6719-BEI	115
540-8400	106
540-8407	106
540-8430	106
540-8437	106
540-8460	106
540-8500	106
540-8507	106
540-8530	106
540-8537	106
540-8550	106
540-8557	106
540-8580	106
540-8587	106
540-8610	107
540-8617	107
540-8630	107
540-8637	107
540-8700	107
540-8830	107
542-3060B	336, 337
542-3240	107
542-3240B	333, 334, 335
542-6200	104, 107
542-9600B	333
542-9610B	333
545-5700	111
545-5707	111
545-5710	111
545-5717	111
545-5750	111
545-5757	111
545-8400	111
545-8407	111
545-8410	111
545-8417	111
545-8430	111
545-8437	111
545-8500	111
545-8507	111
545-8510	111
545-8517	111
545-8530	111
545-8537	111
545-8550	111
545-8557	111
545-8580	111
545-8587	111
550-0020	107
550-0120	208
550-0260	314
550-0411	208
550-0601B	314
550-0611	314
550-0621	314
550-0631	314
550-0701B	314
550-995xB	333, 334, 335
550-1030B	336, 337
550-1500B	339
550-1600	208
550-1801B	323
550-1811B	323
550-1821B	321, 323
550-1831B	321, 323
550-1833B	321
550-1841B	321, 323
550-2120B	347
550-2130B	347
550-2515B	315
550-2630B	330, 332
550-4050B	339
550-4060B	339
550-4080B	339
550-4090B	339
550-4110B	307
550-4120B	307
550-4130B	307
550-4200B	307
550-4210B	307
550-4220B	307
550-4230B	307, 311
550-4240B	307, 311
550-4250B	307, 311
550-4260B	307
550-4280	26
550-4300B	311
550-4310B	307
550-4320B	307
550-4330B	311
550-4340B	311
550-4350B	307
550-4360B	311
550-4370B	311
550-4380B	307
550-4390B	307
550-4400B	311
550-4410B	307
550-4430B	307
550-4440B	307
550-4450B	307
550-4460B	311
550-4470B	311
550-4480B	311
550-4500B	311
550-4780B	311
550-4990B	328
550-5000B	328
550-5010B	328
550-5060B	328
550-5100DB	315
550-5110B	328
550-5150B	328
550-5220B	328
550-5230B	328
550-5340B	319
550-5370B	319
550-5410B	317
550-5420B	317
550-5430B	317
550-5610	208
550-5701B	326
550-5735-1B	326
550-5750-1B	326
550-5775-1B	326
550-5835-1B	326
550-5850-1B	326
550-5875-1B	326
550-6100	208
550-6110	208
550-6600B	341
550-6610B	341
550-6620B	341
550-6630B	341
550-6700	65
550-6800	230
550-6810	230
550-6910B	327
550-7100B	312
550-7120B	312
550-7210B	312
550-7220B	312
550-7500B	312, 313
550-7760	208
550-8620B	331
550-8631B	331
550-8700	24
550-8700B	271, 273
550-9000B	340
550-9010B	340
550-9230	76
550-9231	76
550-9237	76
550-9239-DKG	76
550-9240	76
550-9247	76
550-9249-DKG	76
550-9330	74
550-9337	74
550-9340	74
550-9340B	338
550-9347	74
560-C0A60S	112
560-C0A67S	112
560-C0C60S	112
560-C0C67S	112
560-C3A60L	112
560-C3A67L	112
560-C3C60L	112
560-C3C60LF	112
560-C3C67L	112
560-D0A60S	112
560-D0A61S	112
560-D0A67S	112
560-D0C60S	112
560-D0C60SF	112
560-D0C67S	112
560-D3C60L	112
560-D3C67L	112
560-J0A50TB	338
570-0036-07	26
570-0048-07	26
570-0060-07	26
570-0325-07	27
570-0425-07	27
570-0525-07*	27
600-0051B	347
600-0101B	348
600-0111	86
600-0220	314
600-0401	86
600-0451	86
600-551x*	169
600-552x*	169
600-1000B	328, 329
600-1020B	331
600-1040B	326, 328, 330
600-1151B	348
600-1180B	347, 348
600-1190B	347
600-1207B	348
600-1287B	347
600-1500	26
600-1500UCPB	317
600-2200	73
600-2201	73
600-2207	73
600-2209-BEI	73
600-2209-DKG	73
600-2300	229
600-2370	229
600-2380	229
600-2900	230
600-3010	174
600-3020*	172
600-3030	176
600-3040*	172
600-3060	174
600-3110	175
600-3140*	173
600-3150*	173
600-3160*	173
600-3170*	173
600-3180*	173
600-3190	173
600-3210	173
600-3220*	173
600-3230*	173
600-3240	176
600-3250	175
600-3260	176
600-3270	176
600-3280	175
600-3290	175
600-3300	176
600-3310	176
600-3320	176
600-3330	175
600-3340	175
600-3600*	173
600-3610*	173
600-3620*	173
600-3630	175
600-3910*	169
600-3960*	169
600-4000	230
600-4101B	307, 311, 317
600-4200	174
600-4210*	172
600-4220*	172
600-4230*	172
600-4330	174
600-4340	174
600-4360*	172
600-4370*	172
600-4380*	172
600-4400*	173
600-4410*	173
600-4420*	173
600-4600*	172
600-4700	172
600-4710	172
600-4720	173
600-4730	173
600-4750	174
600-4780	174
600-5000	230
600-7000	86
600-7010	86
600-7020	86
600-7030	86
600-7040-CPVC	86
600-7050-CPVC	86
600-7060-CPVC	86
600-7070-CPVC	86
600-7100-CPVC	86
600-7160B	303
600-7171B	303
600-7180B	303
600-7200-CPVC	86
600-7300B	303
600-8140	230
600-8150	230
600-8160	230
600-9101	257
600-9167	257
600-9500B	321, 323, 325
600-9600B	321, 323, 325
601-7701-8	169
601-7711-8	169
601-7721-8	169
601-7731-8	169
602-0121B	305
602-0201B	312, 313
602-1910B	316
602-1931B	321, 323, 325
602-3160*	79
602-3160B*	79
602-3161*	79
602-3161B*	79
602-3167*	79
602-3167B*	79
602-4201B	307, 311
602-4440	175, 176
602-4440*	172, 173
602-5301B	317, 319, 321
602-5310B	317, 319, 321, 325
602-5321B	317, 319, 321, 323, 325
602-7000B	303
602-7011B	303
602-7070B	303
602-7071B	303
602-7140B	303
602-7200B	303
602-7251B	303
602-8210B	331
605-0111B	305
608-3668L-DSG	171
608-3918L-DSG	171
608-3928L-DSG	171
608-5508L-DSG	171
608-5518L-DSG	171
608-7608L-DSG	171
611-1218	187
611-1228	187
611-5001	258
611-6090	258
611-7000	258
616-1100	258
616-1300	258
616-1400	258
616-1600	258
616-1800	258
616-2000	258
616-3001	258
616-4001	258
630-0005	191
630-0008	188
630-0008S	188
630-0038	189
630-0068	188
630-0068S	188
630-1105	190
630-1115	190
630-5005	190
630-5008	188
630-5105	190
630-5115	190
630-5205	190
630-6005	190
630-6058S	188
630-6105	190
630-6115	190
630-6205	190
630-6300	189
630-6400	189

Part No.	Page
630-K005	191
630-K008	188
630-K008S	188, 191
630-K105	191
630-K115	191
633-1000	193
633-7068	188
633-7078	188
633-7088	188
633-8018	187
633-8028	187
640-100x V	101
640-130x V	99
640-131x V	99
640-132x V	97
640-133x V	97
640-134xLG V	100
640-134x V	100
640-135x V	100
640-136x V	98
640-137x V	98
640-180x V	89
640-190x V	89
640-191x V	94
640-191x VB	342
640-213x V	90
640-214x V	90
640-226X V	93
640-231x V	91
640-234x V	94
640-234x VB	342
640-292x V	94
640-325x VP	161
640-328x VP	161
640-348x VP	161
640-349x VP	164
640-378x V	165
640-379x V	165
640-393x VP	166
640-394x VP	166
640-0400	160
640-0401S	160
640-0420	160
640-0430	160
640-472x V	95
640-476x V	96
640-477x V	96
640-479x V	95
640-520x V	165
640-525x V	165
640-530x V	165
640-535x V	165
640-630XS V	163
640-630X V	163
640-631XS V	163
640-631X V	163
640-722x V	94
640-723x V	94
640-732x V	94
640-733x V	94
640-820x V	102
640-821x V	102
640-822x V	102
640-823x V	102
640-824x V	102
640-825x V	102
640-2000	257
640-2001	257
640-2260 VB	345
640-2261 VB	345
640-2267 VB	345
640-2410 V	92
640-2800	114
640-2801	114
640-2807	114
640-2809-BEI	114
640-2809-DKG	114
640-2900	114
640-2901	114
640-2907	114
640-2909-BEI	114
640-2909-DKG	114
640-3000	114
640-3001	114
640-3007	114
640-3170	207
640-3570S V	165
640-3580S V	165
640-4220	207
640-4230	207
640-4240	207
640-4340	160
640-4400	160
640-4440	160
640-6600	198
640-7400 V	92
640-7410 V	92
640-7420 V	94
640-7500 V	92
640-7510 V	92
640-7600 V	92
640-7610 V	92
640-8300 V	92
640-8400 V	93
640-8500 V	92
640-8600 V	93
640-8700 V	92
640-8800 V	93
640-8900 V	93
640-9000	72
640-9007	72
642-214XB	342
642-241X VB	342
642-311XB	342
642-471xB	343
642-474XB	343
642-479x VB	343
642-479X VB	343
642-1320	97, 98, 99, 100, 346
642-1340 V	346
642-1390	346
642-2090B	345
642-2091B	345
642-2097B	345
642-2130	114
642-2400 VB	342, 345
642-2401 VB	345
642-2407 VB	345
642-2409-BEI VB	345
642-2409-DKG VB	345
642-2410 VB	345
642-3270B V	346
642-3610	166
642-3620B	346
642-3630B V	346
642-3680	166
642-3700	166
642-3730	166
642-3750	166
642-4720 VB	343
642-4730B	343
642-4760B	343
645-100x V	101
645-2150 VB	345
645-2151 VB	345
645-2157 VB	345
645-2159-BEI VB	345
645-2159-DKB VB	345
645-2159-DKG VB	345
650-1010	167
650-2010	167
650-3400	113
660-3400	113
660-3407	113
660-3500	168
660-3510	168
660-3520	168
660-3530	168
660-3560	168
660-3570	168
660-3580	168
660-3590	168
660-3600	168
660-3910	168
660-4400	167
660-4400S	167
660-4410	167
660-4410S	167
660-4440	167
660-4450	167
660-5510	168
660-6011	168
662-2700	259
662-2710	259
662-2720	259
662-2730	259
668-3918L-DSG	171
668-5518L-DSG	171
668-7608L-DSG	171
670-1100	230
670-2000	207
670-2190	158
670-2200	158
670-2210	158
670-2220	230
670-2270	230
670-2290	158
670-2300	158
670-2310	158
670-2330	158
670-2350	158
670-2360	158
670-2380	158
670-2390	158
670-2408L	158
670-2500	158
670-2600	158
670-2800	259
672-0041	189
672-0400	248
672-0410	248
672-0420	248
672-0550	247
672-0600	259
672-1000	55, 228
672-1000B	325
672-1010	55, 228
672-1010B	315, 338
672-1020	228
672-1030	228
672-1051B	315
672-1060	228
672-1060B	294
672-1080	228
672-1100	228
672-1160	228
672-1170	228
672-1300B	275, 277
672-1310B	275, 277
672-1320	228
672-1350B	279, 283, 285, 287
672-1380B	271, 273
672-1430	249
672-1440	249
672-1450	249
672-1460	253
672-2000	113
672-2001	113
672-2002	113
672-2007	113
672-2009-DKG	113
672-2410B	345
672-2420B	345
672-2430B	345
672-2500B	345
672-2510B	345
672-2520B	345
672-2530B	345
672-3900	248
672-4010	247
672-4020	247
672-4030	247
672-4040	247
672-4070	247
672-4100	247
672-4110	244
672-4120	244
672-4130	244
672-4140	250
672-4150	250
672-4160	250
672-4170	250
672-4180	245
672-4190	245
672-4200	245
672-4210	245
672-4250	244
672-4260	245
672-4270	245
672-4280	245
672-4310	252
672-4320	252
672-4340	248
672-4350	249
672-4370	247
672-4380	244
672-4390	246
672-4400	245
672-4410	250
672-4430	244
672-4490	250
672-4540	114
672-4541	114
672-4547	114
672-4549-BEI	114
672-4570	244
672-4580	244
672-4610	247
672-4620	246
672-4630	244
672-4640	245
672-4660	248
672-4670	245
672-4680	250
672-4690	247
672-4700	247
672-4770	250
672-4900	250
672-4910	250
672-4920	250
672-4930	250
672-4940	250
672-4960	250
672-4980	251
672-5060	247
672-5070	247, 248
672-5080	247, 248
672-5090	200
672-5200	250
672-5240	250
672-5250	250
672-5260	250
672-5301B	317, 319
672-5800	247
672-5810	247
672-5820	247
672-5830	247
672-5900	247
672-5910	247
672-5920	247
672-5930	247
672-5960	247
672-6560	258
672-6970	246, 250
672-7100	251
672-7110	251
672-7120	251
672-7130	251
672-7140	251
672-7150	251
672-7160	251
672-7170	251
672-7180	251
672-7190	246
672-7201	55
672-7201B	321, 323
672-7211	28, 55
672-7211B	321, 323
672-7221	55
672-7241	55
672-7241B	321, 323
672-7250	228
672-7360	250
672-7370	250
672-7380	250
672-7401	55
672-7401B	312, 313
672-7900	244
672-7910	245
672-7920	250
672-7930	250
672-8000	242
672-8010	242
672-8020	242
672-8040	242
672-8050	155, 242
672-9540	155, 242
674-2410	92
674-2420	93
674-2430	93
674-2450	94
674-2500	92
674-2510	92
674-2520	93
674-2530	93
674-2550	94
674-2560	94
674-2600	92
674-2610	92
674-2620	93
674-2640	94
674-2700	92
674-2710	92
674-2720	94
674-2730	94
674-2900	92
674-2910	92
674-2920	94
674-2930	94
675-0700	184
675-0710	184
675-0720	184
675-0730	184
675-0790L	184
675-0800	184
675-0810	184
675-0820	184
675-0830	184
675-0908L	184
675-0918L	184
675-0928L	184
675-0938L	184
675-1380	55
675-1500	55
675-1500B	289, 291
675-2000	185
675-2000S	185
675-2020L	197
675-3500	182
675-3500S	182
675-3508L	182
675-3508LS	182
675-3510	181
675-3518LS	181
675-3550	182
675-3550S	182
675-3558L	182
675-3558LS	182
675-3600	182
675-3600S	182

Part No.	Page
675-3608L	182
675-3608LS	182
675-3610	181
675-3618LS	181
675-3660	182
675-3660S	182
675-3668L	182
675-3668LS	182
675-3708L	182
675-3708LS	182
675-3800	179
675-3800L	179
675-4000	180
675-4000S	180
675-4008L	183
675-4900	180
675-4900S	180
675-4908L	183
675-5280	183
675-5280L	183
675-5300	183
675-5300L	183
675-5330	183
675-5330L	183
675-6501	259
675-6507	259
675-6509-BRN	259
675-6530	259
680-2000	208
700-3011-000	56, 159
700-3102-000	56, 159
700-3151-000	56, 159
700-3152-000	56, 159
700-3201-000	56, 159
700-3202-000	56, 159
711-0010	168
711-0020	158
711-0060B	336, 337
711-0070B	336, 337
711-0080	160
711-1010B	315, 328, 329, 330, 337
711-1350	158
711-1670B	307, 311
711-1730	123
711-1750	123
711-1910B	321, 323, 325
711-1920B	323, 325
711-2600B	345
711-3050	177
711-3250B	346
711-3260B	346
711-4000	39, 62, 234, 236
711-4000B	293, 321, 323
711-4010	63, 235, 237, 312, 313
711-4010B	290, 291, 294, 321, 323
711-4020	63, 235, 237
711-4030	63, 235, 237
711-4050	236
711-4070	121
711-4200B	307, 311
711-4290B	275, 277
711-4300B	275, 277, 279, 283, 285, 287
711-4310	177
711-4350B	327
711-4400	148
711-4410	148
711-4600	177
711-4750	123
711-5140L	148
711-5300B	294
711-5310B	319
711-6020	237
711-6020B	275, 277
711-6500	148
711-6608	148
711-6900	148
711-6910	148
711-7000B	327
711-7300	156
711-8010	208
711-8200B	331
711-9510B	334
711-9520B	334
711-9860	121
711-9870	121
713-9520B	334
715-0000	79, 255
715-0040	255
715-0340	253
715-1001B	315, 328, 329
715-1010B	328, 329
715-1201B	275, 277, 279, 283, 285, 287, 288, 289, 290, 291, 292, 293, 294, 295, 297, 300, 302
715-1230	79
715-1230B	345
715-1261	249
715-1307B	303
715-1360	346
715-1910	73
715-1911	73
715-1917	73
715-2000	79, 255
715-2030B	337
715-4000	79, 255
715-4020B	290, 296, 299, 301
715-6011B	317
715-6611B	307, 311
715-8400B	271, 273
715-9770	255
715-9850	255
715-9860	255
715-9870	255
715-9880	79, 255
715-9890	79, 255
715-9900B	328
715-9910	79, 346
715-9910B	334, 335, 345
718-1000B	326, 328, 330, 332
718-3150B	327, 346
718-4201B	307, 311
718-4320B	307
718-6960	149
718-7000B	327
718-7027B	303
718-7031-CPVCB	305
718-7219B	312
718-8200B	331
730-1000	168
741-CGGG-45X	193
741-CGGZ-37LB	288, 290, 293
741-CGGZ-44X	193
741-CGGZ-67RB	288, 290, 293
741-CGGZ-257RB	289, 291
750-3101-280	56
750-3102-280	56
750-3151-280	56
750-3152-280	56
750-3201-280	56
750-3202-280	56
770-0006	57
770-0050	57
770-0100	57
770-0150	57
770-0200	57
770-1000-PS	57
770-1002-PS2	57
770-1004-PSW	57
770-1006-PSW2	57
773-2400	57
775-0501	193, 194
775-0502	193
775-0503	194, 195
775-0504	193, 194
775-0523	193
777-WW02007	193
777-WW06000	192
777-WW99001	193
777-WW99002	193
777-WW99003	193
777-WW99004	193
777-WW99010	194
777-WW99011	194
777-WW99012	194
777-WW99013	194
777-WW99014	194
777-WW99015	194
777-WW99020	195
777-WW99021	195
777-WW99022	195
777-WW99023	195
777-WW99050	193
777-WW99051	193
777-WW99052	193
777-WW99053	193
780-8020	193
800-0100B	321, 323, 325
800-0150B	321, 323, 325
802-0009B	309
802-1050B	309
805-0000B	307, 311
805-0001-SPLB	288, 289
805-0014	254
805-0014B	279, 283, 285, 287
805-0110B	307, 311
805-0112B	271, 273, 275, 277, 288, 289, 290, 291, 292, 293, 294, 295, 296, 297, 299, 300, 301, 302
805-0114B	315, 328, 329
805-0116EPB	303, 313, 317
805-0117SDB	312
805-0118VB	348
805-0124VB	348
805-0132	123
805-0136B	313
805-0145	63, 235
805-0145B	307
805-0151B	303
805-0158B	290, 299, 301
805-0164B	296
805-0206B	309
805-0207B	312, 313
805-0224	39, 236, 312, 313
805-0224B	307, 311, 312, 313, 317, 321, 323, 325
805-0226	62, 234
805-0226B	315, 337
805-0228B	309
805-0229	63, 235, 237
805-0230B	311
805-0232	63, 235
805-0232B	27, 311
805-0233B	307, 311
805-0238B	275, 277, 279, 283, 285, 287
805-0239B	303
805-0241B	305
805-0248B	298
805-0252B	292, 293, 302
805-0254B	316, 321, 323, 325
805-0256B	290, 291, 300
805-0261B	294, 295
805-0264B	297
805-0268B	271, 273
805-0330B	288, 289
805-0332B	279, 283, 285, 287
805-0339B	307, 311
805-0339BN50B	317
805-0340VB	347, 348
805-0348VB	347, 348
805-0360B	315, 328, 329
805-0435B	321, 323
805-0436B	279, 283, 285, 287, 290, 291, 293, 294
805-0439B	275, 277, 288, 289
805-0442B	317, 319
805-0460B	312, 313
806-0003B	348
806-0010	148
806-0011	148
806-0012	148
806-0013	148
806-0018	148
806-0021	148
806-0022	148
806-0023	148
806-0060	148
806-0061	148
806-0062	148
806-0063	148
806-0100	257
806-1000B	309
806-1070B	339
806-1400B	279, 283, 285, 287
806-2100S	187
806-3000B	345
811-8160	254
813-0025B	289, 291
813-4370	191
813-4400	191
813-4500	191
815-4011B	289, 291
817-0001B	317
817-0010	209
817-0010B	339
817-0011	209
817-0012	209
817-0014	209
817-0015	209
817-0016	209
817-0017B	331
817-0018B	331
817-0019B	331
817-0020B	327
817-0050	209
817-0050B	340, 341
817-0075NB	314
817-0075PB	313
817-0081B	311
817-0100NB	314
817-0100PB	313
817-0106B	311
817-0125NB	313, 314
817-0131B	311
817-0150NB	313, 314
817-0175NB	314
817-0200NB	313, 314
817-1000	209
817-1000B	328
817-2500	209
817-2500B	315, 328, 329, 330, 332, 337
817-3501	209
817-3501B	330, 332
817-3510	209
817-3640	209
817-4035B	326
817-4050B	326
817-4075B	326
817-5000	209
817-5000B	315, 328, 329, 330, 332, 337
817-5010	209
817-7500	209
817-7500B	328
818-3900B	307
818-3910B	307
818-3920B	307
818-3930B	307
818-3940B	307
818-3950B	307
819-0005B	333, 334, 335, 345
819-0006B	336, 337, 340
819-0008B	327
819-0010B	316, 321, 323, 325
819-0011B	271, 273, 275, 277
819-0013B	271, 273, 275, 277, 279, 283, 285, 287
819-0016B	275, 277, 279, 283, 285, 287, 321, 323
819-0018B	275, 277, 279, 283, 285, 287
819-0019B	321, 323
819-0020B	321, 323
819-0024B	346
819-0025B	303
819-0030B	334, 335, 341
819-0035B	279, 283, 285, 287
819-0051B	342
819-0114B	327
819-0800B	271, 273, 288, 289
819-1031	346
819-1031B	343
819-1040B	294
819-1110B	290, 291, 292, 293, 294, 295, 296, 297, 298, 299, 300, 301, 302
819-1115B	342
819-1250B	346
819-1251	346
819-2590B	271, 273
819-3260B	340, 341
819-4350B	291, 333, 334, 335
819-4360B	275, 277, 279, 283, 285, 287
819-6930B	339
819-6940B	345
819-6945B	334
819-6950B	335
819-9001B	294
819-9002B	289, 291, 312, 313
820-0013B	271, 273, 321, 323, 325
820-0016B	275, 277
820-0017-1B	279, 283, 285, 287
820-0017B	275, 277, 279, 283, 285, 287, 321, 323
820-0018B	275, 277, 294
820-0019B	271, 273
820-1050B	309
820-4110B	335
820-4150B	294
827-0002B	321, 323, 325
827-8150B	307, 311
830-3000B	315, 317, 321, 323, 325
830-4000SSB	307, 311, 312, 313
865-0200B	333
865-0800B	289, 291
872-0004	257
872-0011B	315, 321, 323, 325, 338, 348
872-0046B	317, 319
872-2130DB	317
872-2240B	348
872-2290B	347
872-2291B	348

Part No.	Page
872-4000EB	314
872-4000FB	314
872-4000LB	314
872-6200B	271, 273
872-9000B	338
872-9001B	325
872-9002B	315, 321, 323, 325
873-E7S2B	316
873-E12S1B	316
873-E12S2B	316
873-E15S1B	316
873-E16S1B	316
873-E17S1B	316
873-E1011S2B	316
880-1500	229
880-1510	229
880-1530	229
880-1599	229
880-2000	229
880-2010	229
880-2020	229
880-2099	229
880-2500	229
880-2520	229
880-2599	229
885-8020	193
902-2000B	315, 338
916-0030	168
916-1010B	339
916-1250	123
916-3001	168
3310330-1	285
3312610-14	225
3312610-19	225
3312620-14	225
3312620-19	225
3410030-1E	224
3410030-1E77	224
3410210-1524	19
3410210-1529	19
3410210-1544	19
3410210-1549	19
3410310-15	23, 223
3410314-1524	19
3410314-1529	19
3410314-1544	19
3410314-1549	19
3410410-1A	219
3410410-10	20, 221
3410410-15	23, 223
3410410-S0Z	21, 222
3410413-1524	19
3410413-1529	19
3410413-1544	19
3410413-1549	19
3410610-1A	219
3410610-1U	22, 220
3410610-15	23, 223
3410610-S0Z	21, 222
3410612-10	20, 221
3410612-1524	19
3410612-1529	19
3410612-1544	19
3410612-1549	19
3410811-1524	19
3410811-1529	19
3410811-1544	19
3410811-1549	19
3410830-1A	219
3410830-10	20, 221
3410830-13	219
3410830-15	23, 223
3410830-S0Z	21, 222
3411020-1U	22, 220
3411621-1A	219
3411621-1U	22, 220
3411621-13	219
3420310-15	23, 223
3420310-1524	19
3420310-1529	19
3420310-1544	19
3420310-1549	19
3420410-1A	219
3420410-10	20, 221
3420410-13	219
3420410-15	23, 223
3420410-S0Z	21, 222
3420411-1524	19
3420411-1529	19
3420411-1544	19
3420411-1549	19
3420610-1A	219
3420610-1U	22, 220
3420610-10	20, 221
3420610-13	219
3420610-15	23, 223
3420610-1524	19
3420610-1529	19
3420610-1544	19
3420610-1549	19
3420610-S0Z	21, 222
3420612-1524	19
3420612-1529	19
3420612-1544	19
3420612-1549	19
3420620-1A	219
3420620-10	20, 221
3420620-13	219
3420620-15	23, 223
3420820-1A	219
3420820-1U	22, 220
3420820-10	20, 221
3420820-13	219
3420820-15	23, 223
3420820-S0Z	21, 222
3421020-1U	22, 220
3421021-1U	22, 220
3421221-1A	219
3421221-1U	22, 220
3421221-13	219
3421821-1A	219
3421821-1U	22, 220
3421821-13	219
3710821-1D	218
3710821-13	218
3711221-1D	218
3711221-13	218
3711621-0V	216
3711621-1D	218
3711621-1W	22, 220
3711621-13	218
3712021-0V	216
3712021-1D	218
3712021-13	218
3720821-1D	218
3720821-1W	22, 220
3720821-13	218
3721221-1D	218
3721221-1V	216
3721221-13	218
3721621-1D	218
3721621-1V	216
3721621-1W	22, 220
3721621-13	218
3722021-0V	216
3722021-1D	218
3722021-13	218
3810430-1PDA	24
CABASE	55
CABASE-V	55
CABASE-VF	55
CAG004-W	65
CHAMPE-107	15
CHAMPE-110	15
CHAMPE-115	15
CHAMPE-120	15
CHAMPS-107	15
CHAMPS-110	15
CHAMPS-115	15
CHAMPS-120	15
CHAMPS-125	15
CHAMPS-215	15
CHAMPS-220	15
CLC012	65
CLC012-W	65
FC0757	31
FC1007	31
FC1257	31
FC1507	31
FC2007*	31
FCS0757S	32
FCS1007S	32
FCS1257S	32
FCS1507S	32
FCS2007S	32
FCS075107-3	32
FCS075107-3S	32
FCS075107-6	32
FCS075107-6S	32
FCS100107-3	32
FCS100107-3S	32
FCS100107-6	32
FCS100107-6S	32
FCS100137-6S	32
FCS125157-3	32
FCS125157-3S	32
FCS125157-6	32
FCS125157-6S	32
FCS150157-3	32
FCS150157-3S	32
FCS150157-6	32
FCS150157-6S	32
FCS200137-6S	32
FCS200157-3	32
FCS200157-3S	32
FCS200157-6	32
FCS200157-6S	32
FCSC07510-25S	51
FCSC10010-25S	51
FCSC15015-25S	51
FCSC20015-25S	51
FD12-7	28
FD18-7	28
FDS0447S	29
FDS0677S	29
FDS044107-3	29
FDS044107-3S	29
FDS044107-6	29
FDS044107-6S	29
FDS067107-3	29
FDS067107-3S	29
FDS067107-6	29
FDS067107-6S	29
FDS067157-3	29
FDS067157-3S	29
FDS067157-6	29
FDS067157-6S	29
FDSC04410-25S	51
FDSC06710-25S	51
FPS07510-6	36
FPS07510-6S	37
FPS10010-6	36
FPS10010-6S	37
FPS10015-6	36
FPS10015-6S	37
FPS12515	37
FPS12515-6	36
FPS15015	37
FPS15015-6	36
FPS17515-6	36
FPS17515-6S	37
FPS20015-6	36
FPS20015-6S	37
FPS20020-6	36
FPS20020-6S	37
FPSC10010-25S	50
FPSC10015-25S	50
FPSC12515-25S	50
FPSC15015-25S	50
FPSC17515-25S	50
FPSC20015-25S	50
FPSC20020-25S	50
FS016	43
FS016H	52
FS019	43
FS019H	52
FS022	43
FS022H	52
FS026	43
FS026H	52
FS01619H	53
FS01922H	53
FS02225H	53
FS02629H	53
FS016197	40
FS019227	40
FS022257	40
FS026297	40
FSS019S	44, 45
FSS022S	44, 45
FSS026S	44, 45
FSS0169S7	41
FSS0199S7	41
FSS0229S7	41
FSS0269S7	41
FSS01910-3	44
FSS01910-3S	45
FSS01910-6	44
FSS01910-6S	45
FSS01915-3	44
FSS01915-3S	45
FSS01915-6	44
FSS01915-6S	45
FSS02210-3	44
FSS02210-3S	45
FSS02210-6	44
FSS02210-6S	45
FSS02215-3	44
FSS02215-3S	45
FSS02215-6	44
FSS02215-6S	45
FSS02615-3	44
FSS02615-3S	45
FSS02615-6	44
FSS02615-6S	45
FSS0169107-3	41
FSS0169107-3S	41
FSS0169107-6	41
FSS0169107-6S	41
FSS0199107-3	41
FSS0199107-3S	41
FSS0199107-6	41
FSS0199107-6S	41
FSS0229157-3	41
FSS0229157-3S	41
FSS0229157-6	41
FSS0229157-6S	41
FSS0269157-3	41
FSS0269157-3S	41
FSS0269157-6	41
FSS0269157-6S	41
FSSC01610-25S	52
FSSC01910-25S	52
FSSC02215-25S	52
FSSC02615-25S	52
FSSC016910-25S	53
FSSC019910-25S	53
FSSC022915-25S	53
FSSC026915-25S	53
PCCF-075	34
PCCF-100	34
PCCF-125	34
PCCF-150	34
PCCF-175	34
PCCF-200*	34
PD-110X	215
PD-175	25
PD-215VSX	213
PD-230E	214
PD-240E	214
PD-240VSE	212
PD-245E	214
PD-250VV	211
PD-275	25
PD-VAG125	9
PD-VPA125	9
PD-VSA125	9
PD-VSA300	13
PD-VSC165	10
PD-VSC270	11
PD-VSC300	12
PD-VSC1165	10
PH1075-3	18
PH1075-6	18
PH1100-3	18
PH1100-6	18
PH1150-3	18
PH1150-6	18
PH1200-3	18
PH1200-6	18
PH2075-6	18
PH2100-3	18
PH2100-6	18
PH2150-3	18
PH2150-6	18
PH2200-3	18
PH2200-6	18
PHC1075-25	49
PHC1100-25	49
PHC1151-25	49
PHC2075-25	49
PHC2100-25	49
PHC2150-25	49
PSP1075-3	17
PSP1075-6	17
PSP1100-3	17
PSP1100-6	17
PSP1150-3	17
PSP1150-6	17
PSP1200-3	17
PSP1200-6	17
PSP2075-3	17
PSP2075-6	17
PSP2100-3	17
PSP2100-6	17
PSP2150-3	17
PSP2150-6	17
PSP2200-3	17
PSP2200-6	17
PSPC1075-25	48
PSPC1100-25	48
PSPC1150-25	48
PSPC2075-25	48
PSPC2100-25	48
PSPC2150-25	48
SG3P10430-1	271
SMF-107	16
SMF-110	16
SMF-115	16
SMF-120	16
SVL56E-110	14
SVL56E-115	14
SVL56E-120	14
SVL56E-130	14
SVL56S-110	14
SVL56S-115	14
SVL56S-120	14
SVL56S-125	14
SVL56S-215	14
SVL56S-220	14
TW025	183
TW027	183
VB, 642-2411	345
VB, 642-2417	345
VB, 642-2419-BEI	345
VB, 642-2419-DKG	345
WV001H	39
WVD001	26
WVD002	26
WVS002	87
WVS002B	323, 325
WVS003	87
WVS003B	321, 323, 325
WVS004B	319

Notes

Printed in China