INSTRUCTION MANUAL

OASIS

POOL & SPA CONTROL

waterway™

2200 E. Sturgis Road, Oxnard, CA 93030 • Phone 805.981.0262 • Fax 805.981.9403
waterway@waterwayplastics.com • www.waterwayplastics.com

Designed, Engineered & Manufactured in the USA.

OASIS POOL & SPA CONTROL

WARNING! Qualified Technician Required for Service and Installation

FOR YOUR SAFETY

This product must be installed and serviced by a contractor who is licensed and qualified in pool equipment by the jurisdiction in which the product will be installed, where such state or local requirements exist. In the event no such state or local requirement exists, the maintainer must be a professional with sufficient experience in pool equipment installation and maintenance, so that all of the instructions in this manual can be followed exactly. Before installing this product, read and follow all warning notices and instructions that accompany this product. Failure to follow warning notices and instructions may result in property damage, personal injury, or death. Improper installation and/or operation will void the warranty.

Improper installation and/or operation can create unwanted electrical hazard which can cause serious injury, property damage, or death.

Section 1. Important Safety Instructions

READ AND FOLLOW ALL INSTRUCTIONS

All electrical work must be performed by a licensed electrician and conform to all national, state, and local codes. When installing and using this electrical equipment, basic safety precautions should always be followed, including the following:

DANGER

To reduce the risk of severe injury or death, do not remove the suction fittings of your spa or hot tub. Never operate a spa or hot tub if the suction fittings are broken or missing. Never replace a suction fitting with one rated less than the flow rate marked on the equipment assembly.

WARNING

Prolonged immersion in hot water may induce hyperthermia. Hyperthermia occurs when the internal temperature of the body reaches a level several degrees above the normal body temperature of 98.6°F (37°C). The symptoms of hyperthermia include dizziness, fainting, drowsiness, lethargy, and an increase in the internal temperature of the body. The effects of hyperthermia include: 1) unawareness of impending danger; 2) failure to perceive heat; 3) failure to recognize the need to exit spa; 4) physical inability to exit spa; 5) fetal damage in pregnant women; 6) unconsciousness resulting in a danger of drowning.

WARNING

To Reduce the Risk of Injury:

a) The water in a spa should never exceed 104°F (40°C). Water temperatures between 100°F (38°C) and 104°F (40°C) are considered safe for a healthy adult. Lower water temperatures are recommended for young children and when spa use exceeds 10 minutes.

b) Since excessive water temperatures have a high potential for causing fetal damage during the early months of pregnancy, pregnant or possibly pregnant women consult a physician before using a spa or hot tub, and should limit spa water temperatures to 100°F (38°C). Water temperature in excess of 38° C (100° F) may be injurious to your health.

c) Before entering a spa or hot tub, the user should measure the water temperature with an accurate thermometer since the tolerance of water temperature-regulating devices varies.

d) The use of alcohol, drugs, or medication before or during spa or hot tub use may lead to unconsciousness with the possibility of drowning.

e) Obese persons and persons with a history of heart disease, low or high blood pressure, circulatory system problems, or diabetes should consult a physician before using a spa.

f) Persons using medication should consult a physician before using a spa or hot tub since some medication may induce drowsiness while other medication may affect heart rate, blood pressure, and circulation.

DANGER

Risk of electric shock:

Install the controller at least five (5) feet (1.52m) from the inside wall of the pool and/or spa/hot tub using non-metallic plumbing. Canadian installations must be at least three (3) meters from the water. Children should not use spas or hot tubs without adult supervision. Do not use spas or hot tubs unless all suction guards are installed to prevent body and hair entrapment. People using medications and/or having an adverse medical history should consult a physician before using a spa or hot tub.

WARNING

To avoid injury ensure that you use this control system to control only packaged pool/spa heaters which have built-in operating and high limit controls to limit water temperature for pool/spa applications. This device should not be relied upon as a safety limit control.

WARNING

- People with infectious diseases should not use a spa or hot tub.
- To avoid injury, exercise care when entering or exiting the spa or hot tub.
- Do not use drugs or alcohol before or during the use of a spa or hot tub to avoid unconsciousness and possible drowning.
- Before entering a spa or hot tub, measure the water temperature with an accurate thermometer.
- Do not use a spa or hot tub immediately following strenuous exercise.
- Prolonged immersion in a spa or hot tub may be injurious to your health.
- Do not permit any electric appliance (such as a light, telephone, radio, or television) within five (5) feet (1.52m) of a spa or hot tub.
- The use of alcohol, drugs or medication can greatly increase the risk of fatal hyperthermia in hot tubs and spas.
- Water temperature in excess of 100°F (38°C) may be hazardous to your health.

WARNING

A terminal bar marked “GROUND” is provided within the controller. To reduce the risk of electrical shock which can cause serious injury or death, connect this terminal bar to the grounding terminal of your electric service or supply panel with a continuous copper conductor having green insulation and one that is equivalent in size to the circuit conductors supplying this equipment, but no smaller than no. 12 AWG (3.3mm2). In addition, a second wire connector should be bonded with a no. 8 AWG (8.4mm2) copper wire to any metal ladders, water pipes, or other metal within five (5) feet (1.52m) of the pool/spa. In Canada the bonding wire must be minimum 6 AWG (13.3mm2).

CAUTION

A ground-fault circuit-interrupter must be provided if this device is used to control underwater lighting fixtures. The conductors on the load side of the ground-fault circuit-interrupter shall not occupy conduit, boxes, or enclosures containing other conductors unless the additional conductors are also protected by a ground-fault circuit interrupter. Refer to local codes for complete details.

Attention Installer:

Install to provide drainage of compartment for electrical components.

WARRANTY

For product registration visit: www.waterwayplastics.com.
For Warranty questions or claims please contact point of purchase.

SAVE THESE INSTRUCTIONS

Section 2. System Overview

2.1 Package Contents

Package contents will vary depending on which OASIS configuration you are installing.

OASIS - 770-1006-PSW2	OASIS - 770-1002-PS2
• Six Function Controller with removable User Interface (UI) • WiFi OASIS • Waterway Valve Actuators (2) • Water Temperature Sensor Kit • Mounting Hardware • Mounting Bracket • Mounting Bracket for remotely installing UI • Cover plate for UI housing • Installation Manual/ Owner's Manual	• Six Function Controller with removable User Interface (UI) • Waterway Valve Actuators (2) • Water Temperature Sensor Kit • Mounting Hardware • Mounting bracket • Mounting Bracket for remotely installing UI • Cover plate for UI housing • Installation Manual/ Owner's Manual
OASIS - 770-1004-PSW	**OASIS - 770-1000-PS**
• Six Function Controller with removable User Interface (UI) • WiFi OASIS • Water Temperature Sensor Kit • Mounting Hardware • Mounting bracket • Mounting Bracket for remotely installing UI • Cover plate for UI housing • Installation Manual/ Owner's Manual	• Six Function Controller with removable User Interface (UI) • Water Temperature Sensor Kit • Mounting Hardware • Mounting bracket • Mounting Bracket for remotely installing UI • Cover plate for UI housing • Installation Manual/ Owner's Manual

2.2 Electrical Specifications

Power Supply **120 VAC; 60 Hz; 1.67 A**

Contact Rating **High voltage - 25 A;**
3HP @ 240 VAC
1½ HP @120 VAC
1500 Watts Incandescent

Low Voltage - Class 2,
1 A @ 24 VAC

2.3 Materials and Tools

Package contents will vary depending on which OASIS configuration you are installing.

Installation Materials Furnished
• Screw Set (includes Plastic Anchors) • Metal Mounting Bracket

Tools Needed for Installation
• Power Drill • 3/16” Drill Bit - Hammer Drill Bit (only necessary to drill into brick or concrete) • Conduit Fittings • Wire Nuts • Wire Crimping Pliers • Pencil or Marking Pen • Flat Head Screwdriver • Phillips Head Screwdriver • Small Flathead or Slotted Screwdriver

Section 3. Install Controller Box

WARNING

FOR YOUR SAFETY: This product must be serviced by a professional pool/spa service technician as described on the front cover of this manual. The procedures in this manual must be followed exactly. Failure to follow warning notices and instructions may result in property damage, serious injury, or death. Improper installation and/or operation will void the warranty.

When mounting the controller box in the equipment pad, instructions must be followed exactly. Read through the Important Safety Information section completely before beginning installation and before operating the equipment.

Before you begin installation, make sure you have the necessary tools and a suitable location to install the OASIS.

NOTE: The controller should be located at or near the equipment pad.

Locate the controller at least five (5) feet or more away from pool/spa and five (5) feet off the ground. All national, state, and local codes are applicable.

NOTE: For Canadian installations, the controller must be at least three (3) meters (9.8 feet) away from the pool/spa.

3.1 Mount the Controller Enclosure

1. Using a flat screwdriver, rotate door latch to unlock the front cover of the controller.
2. Open the front cover door and remove the mounting hardware kit.
3. Using the holes in the bracket as a guide, mark four (4) dots on the surface where the controller will be mounted. The four (4) mounting holes are 3-15/16” (10 cm) apart center to center.

NOTE: Make sure to mark out the four (4) holes as accurately as possible.

4. Drill four (4) holes in the mounting surface.
5. Press the four (4) plastic anchors firmly into holes.
6. Screw the mounting bracket onto the mounting surface with the four (4) screws provided.

continued next page

CAUTION

Make sure to perform the following step BEFORE mounting the enclosure onto the mounting bracket, otherwise, damage to the threaded hole of the mounting bracket may occur.

7. Open the front cover of the controller and locate the fastening hole under the ground bar. Drill a 3/16" hole through the plastic enclosure.
8. Line up the slot in the controller enclosure with the guide in the mounting bracket and hook on to mount.
9. Secure the controller enclosure to the mounting bracket with the single fine thread Phillips screw provided.

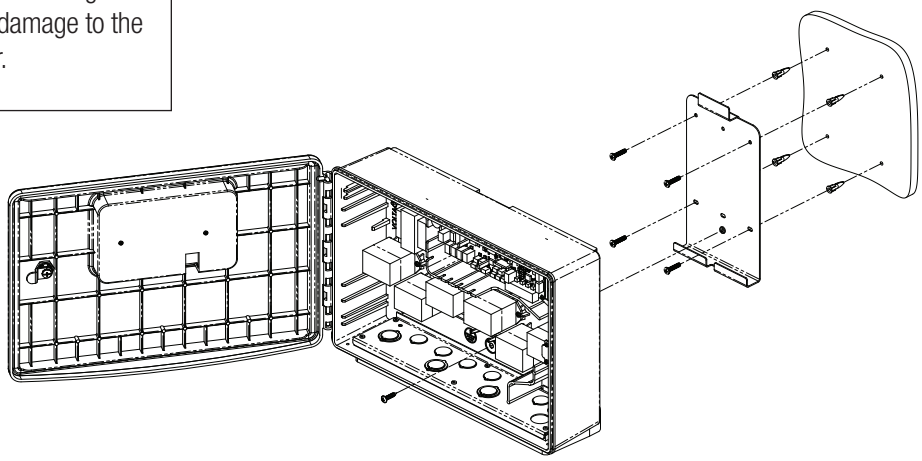

Figure 1. Mounting the Controller Enclosure

3.2 Mount the User Interface for Remote Access

The user interface (UI) may be installed in a more convenient location away from the equipment pad.

To set up the UI remotely, you will need to purchase a CAD 5 cable the length of the remote distance to connect the UI to the controller unit.

NOTE: The UI MUST be mounted OUTDOORS where a pool service technician may conveniently access it.

1. Using the holes in the plastic bracket as a guide, drill two (2) holes on the surface where the UI will be mounted.
2. Screw the bracket to the surface using two (2) screws.
3. Remove the UI from the front of the controller enclosure and attach to the mounting plastic bracket. Secure with set screws on the sides.
4. Use the blank plastic face plate provided to cover the UI housing when UI is removed. Attach face plate to enclosure door with the two screws originally used to fasten the UI to the door.

WARNING

The controller is not to be considered as suitable for use as service equipment. Therefore it is required to have the appropriate means of disconnection, circuit isolation, and/or branch circuit protection installed upstream of the power/control center.

Section 4. High Voltage Wiring

WARNING

Waterway Plastics recommends that any procedure requiring potential contact with live electrical wiring and/or parts other than cords and plugs connected to electrical outlets, be completed by a contractor who is licensed and qualified in pool equipment as described on the front cover of this manual. Failure to follow warning notices and instructions may result in property damage, serious injury, or death.

WARNING

Potentially high voltages in the OASIS controller can create dangerous electrical hazards, possibly causing death, serious injury or property damage. Turn off power at the main circuit feeding the OASIS controller to disconnect the power center from the system.

All high voltage wiring must be done by a licensed electrical contractor.

NOTE: See Figure 10.4 OASIS Electrical Wiring Diagram on page 10 for specific wire locations and connections.

4.1 Ground Fault Circuit Interrupter

WARNING

When using electrical products, basic precautions should always be followed, including the following:

- **DANGER: RISK OF ELECTRIC SHOCK WHICH CAN RESULT IN SERIOUS INJURY OR DEATH.** Before attempting installation or service, ensure that all power to the device is disconnected/turned off at the circuit breaker. Connect only to a circuit protected by a ground fault circuit-interrupter (GFCI).
- Grounding is required. The unit should be installed by a qualified service representative and should be properly grounded and bonded.
- Install to permit access for servicing.
- Please read all cautions and safety instructions in the Important Safety Instructions section.
  Before attempting any electrical wiring, be sure to read and follow safety instructions. Wiring should only be attempted by a qualified professional.

4.2 Connect Grounding Wires and Transformer Wires

The National Electrical Code® (NEC®) requires pool equipment to be bonded to each other. Check your local codes to determine if the NEC and/or other local installation codes are enforced by the Authority Having Jurisdiction (AHJ).

A solid, copper wire minimum 8 AWG (8.37 mm2) wire is recommended, per the NEC, for bonding the controller to a permanent bonding connection that is acceptable to the local AHJ. Refer to your locally enforced codes for the acceptable bonding wire gauge.

Each piece of non-related pool equipment requiring a ground should also be bonded to the common, approved bonding point. There should be one bonding connection to the controller. In Canada, the Canadian Electrical Code (CEC®) dictates that the bonding conductor be a minimum of 6 AWG (13.3 mm2).

4.3 Connect Power and Filter Pump to Relay

As marked in the controller enclosure, Relay 1 is the dedicated Filter Pump relay.

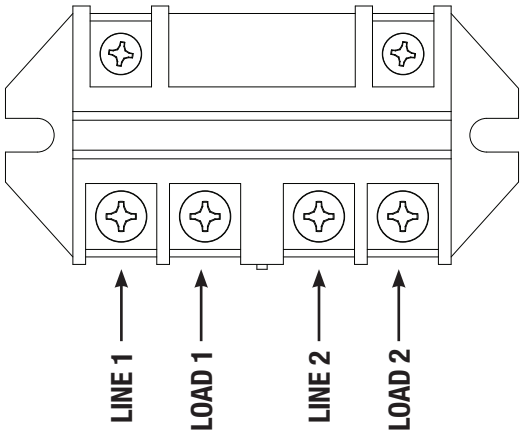

Figure 3. Filter Pump Relay

1. Connect main power wires to Line 1 and 2.
2. If applicable, connect chlorinator ground wire to the ground bar.
3. Connect filter pump and chlorinator wires to Load 1 and 2.

4.4 Connect Additional Equipment to AUX Relays

Use the five (5) additional AUX relays to wire additional high voltage equipment, such as underwater lighting, heater, booster pump,etc. Connect only one device per relay.

For each device:

1. Connect ground wire to ground bar.
2. Connect line power to Line 1 and 2.
3. Connect equipment power to Load 1 and 2.

Section 5. Low Voltage Wiring

All low voltage wiring should be run through the knockouts in the low voltage compartment (right side of controller enclosure). See Figure 4.

IMPORTANT

Never run high voltage and low voltage in the same conduit.

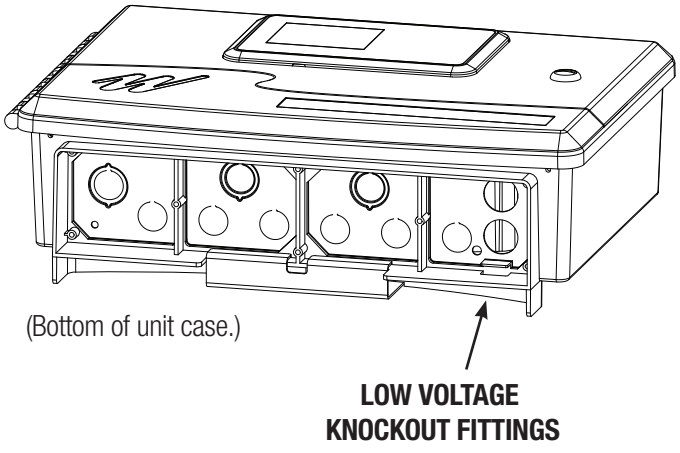

Figure 4. Knockouts for low voltage wiring

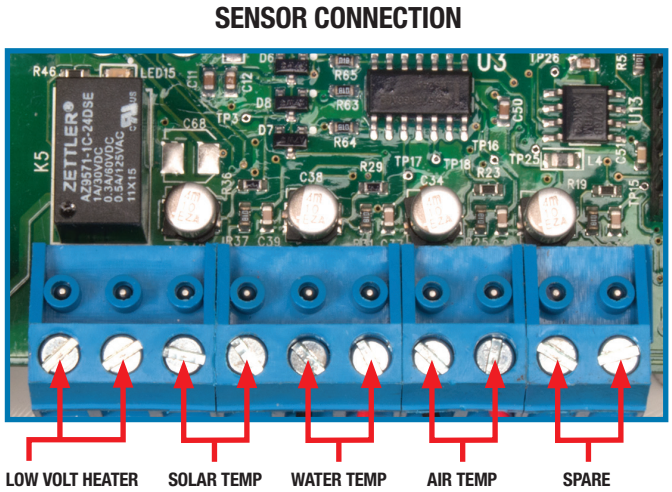

Figure 5. Sensor Connection

5.1 Wire the Temperature Sensors

Wire the temperature sensors on the 10-pin blue connector (see Figure 10.4 Wiring Diagram). The air temperature sensor is factory-installed on the 10-pin blue connector (#7 & #8). The water temperature sensor and necessary installation hardware is included.

5.1.1 Install the Water Temperature Sensor

1. Drill a hole for mounting the water temperature sensor line in the pipe between the pump and the filter (before the heater).
2. Install the O-ring on the sensor and insert the sensor into the hole. Wrap and tighten metal clamp around the pipe to secure sensor.

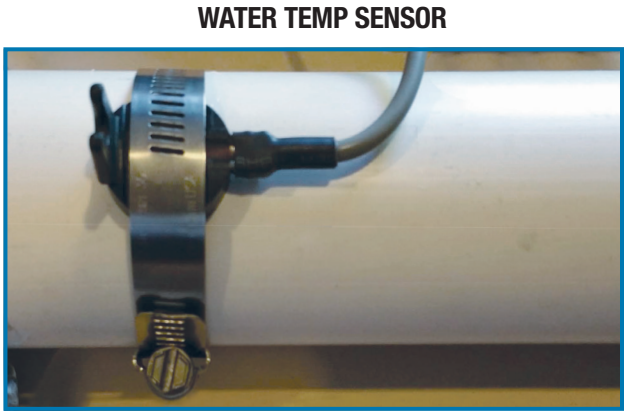

Figure 5.1. Sensor Connection

3. Feed the sensor wire through the black low voltage wiring knockout.
4. Strip 1/4" of insulation and separate the wires.
5. Connect sensor wires to pins #5 and #6 of the 10-pin blue connector.

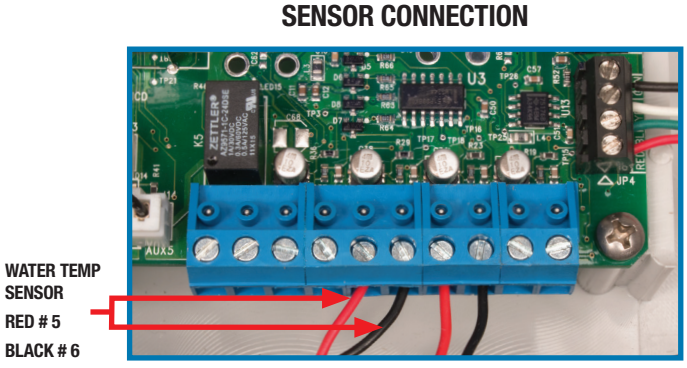

Figure 5.1.1. Sensor Connection

5.1.2 Replacing Air Sensor

The Air Sensor comes pre-installed in the OASIS Controller.
To replace the Air Sensor;

1. Remove nut located on the air sensor probe, remove probe.
2. On the 10 pin sensor connector loosen the screws & remove wires on pin #7 & #8.
3. Install new air sensor and reattach red wire to pin #7 and black wire to pin #8.

AIR TEMP SENSOR

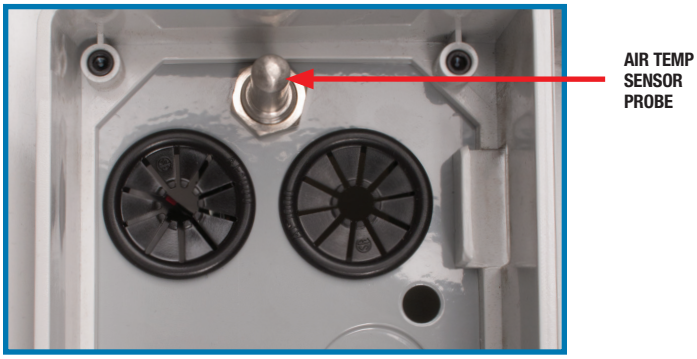

Figure 6. Air Temp Sensor

SENSOR CONNECTION

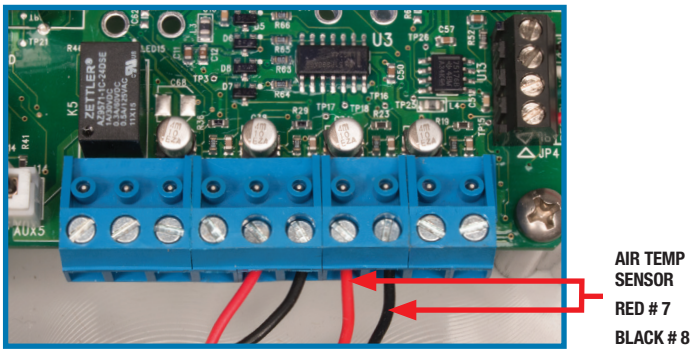

Figure 7. Sensor Connection

5.1.3 Install a Solar Sensor (if applicable)

If there is a solar panel in the equipment configuration, wire the solar panel temperature sensor to the 10-pin blue connector. The solar sensor should be installed adjacent to the solar panel so it will sense the same temperature as the solar panels. Do not install in the pipe.

1. Feed the sensor wire through the black low voltage wiring knockout.
2. Strip 1/4" of insulation and separate the wires.
3. Connect sensor wires to pins #3 and #4. (see Figure 5. Sensor Connection).

5.1.4 Install Additional Low Voltage Equipment (i.e., Heater Connection)

If there is additional low voltage equipment installed, such as low voltage heating.

1. Feed the sensor wire through the black low voltage wiring knockout.
2. Strip 1/4" of insulation and separate the wires.
3. Connect sensor wires to pins #1 and #2.

(see Figure 5. Sensor Connection).

5.2 Install WiFi OASIS (if applicable)

NOTE: For complete instructions and information, refer to the WiFi OASIS instruction manual.

5.2.1 Mount the WiFi OASIS Device

Mount the WiFi OASIS at least 6 feet off the ground and at least 8 feet from motors, such as a blower.

5.2.2 Wire the WiFi OASIS Device

Wire the WiFi OASIS device on the black RS-485 connector (see Figure 10.4 Wiring Diagram).

1. Feed wire through the black low voltage wiring knockout.
2. Connect four (4) separate wires to each terminal (Figure 8).

WIFI CONNECTION
Left to Right Wiring

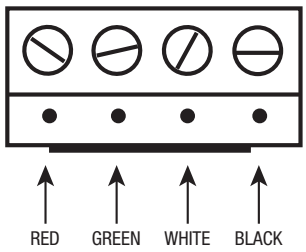

Figure 8. RS-485 Wiring

NOTE: Wire only one device to each RS-485 connector.

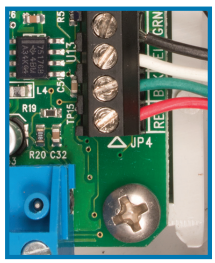

Figure 8.1. RS-485 Connector

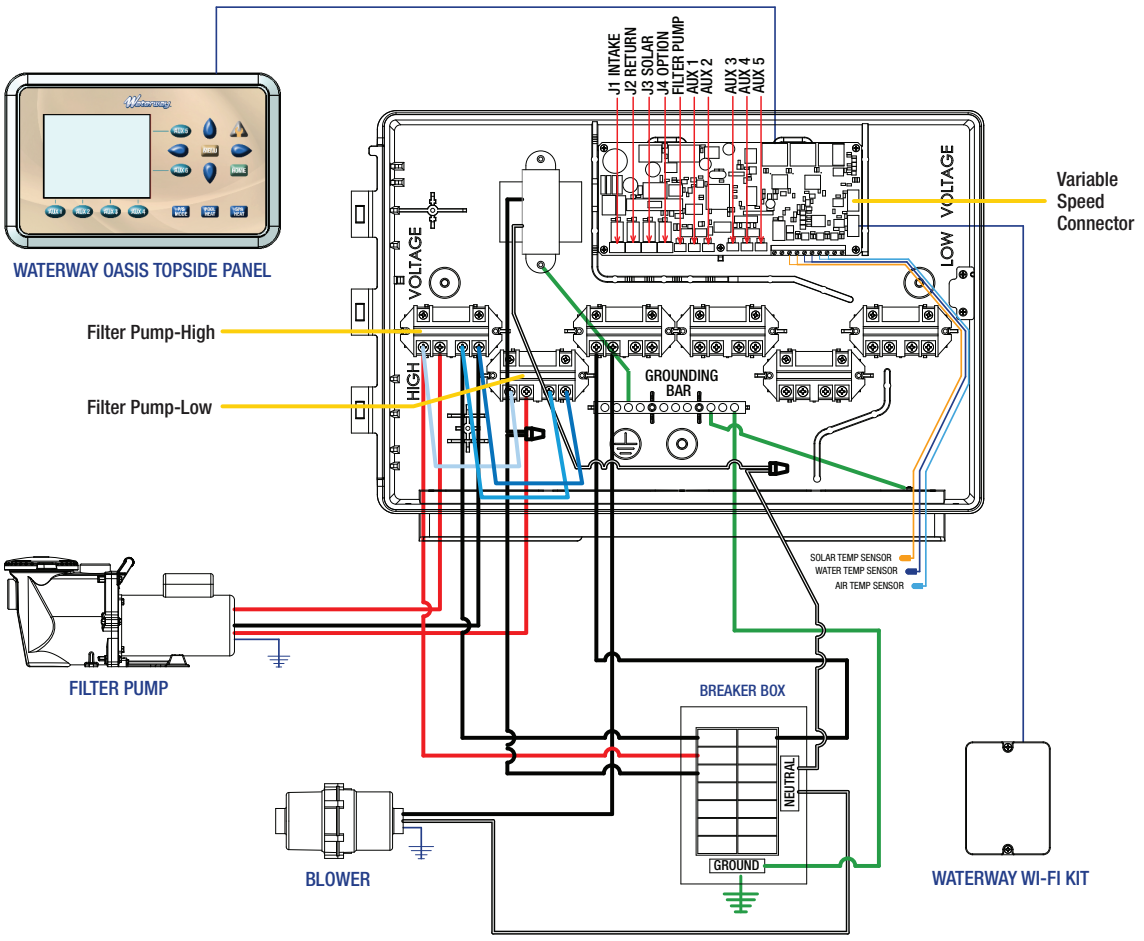

Figure 10.1. OASIS Controller Electrical Wiring Diagram for 2-Speed Pump

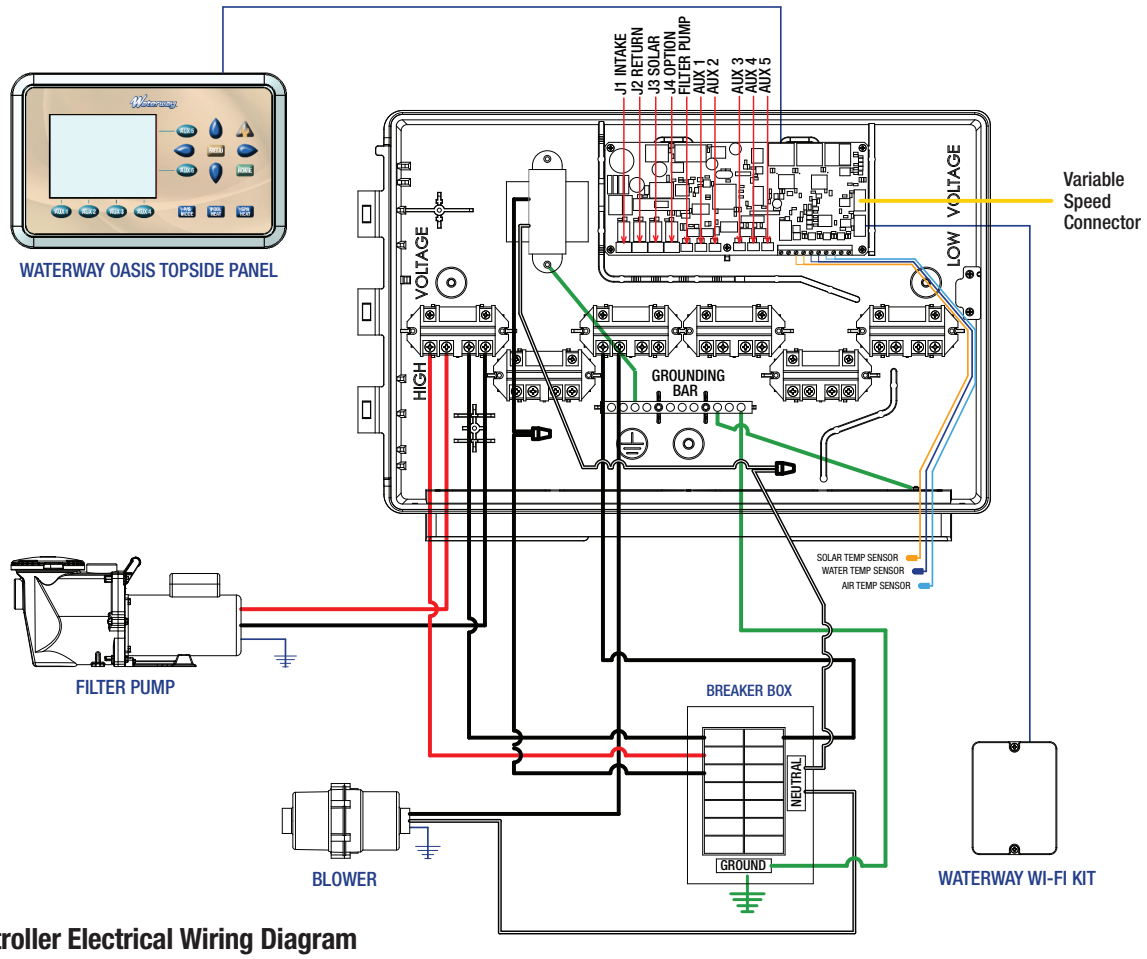

Figure 10.4 OASIS Controller Electrical Wiring Diagram

5.3 Install Filter Pump

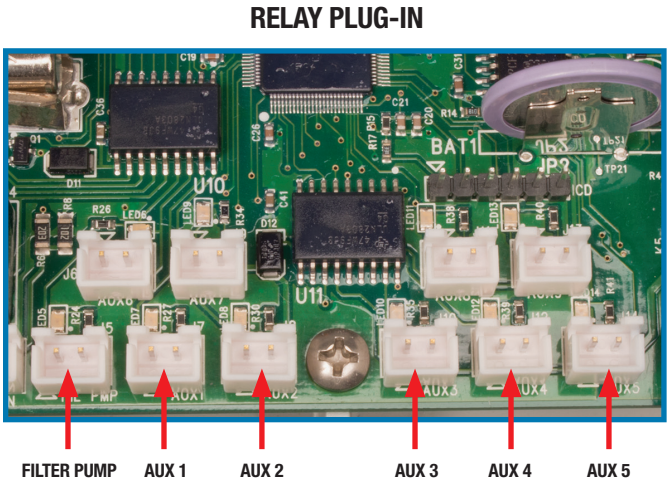

Figure 9. Relay Plug-In

5.3.1 Installing Single Speed Filter Pump

Install Single Speed Pump – relay 1 plug into the connector labeled "Filter Pump" (see Figure 9)

- For 240V from power source connect "Lines" to Relay 1 Line 1 and Relay 1 Line 2.

- Connect "Load" to Relay 1 Load 1 and Relay 1 Load 2 (see Figure 3). For wiring diagram refer to Figure 10)

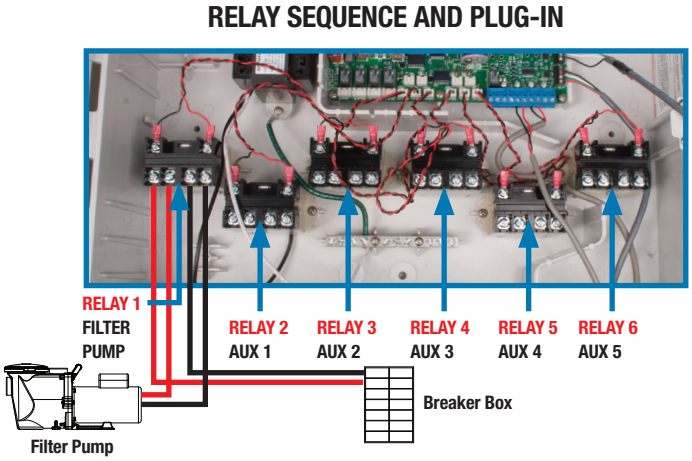

Figure 10. Relay Sequence & Plug-In

5.3.2 Installing Two Speed Filter Pump

Install Two Speed pump – Pump High needs to plug into relay connector label "Filter Pump" and Low needs to plug relay into connector labeled "Aux 1"

- For 240V from power source connect "Lines" to Relay 1, Line 1 and Relay 1, Line 2 on. Aux 1 relay connect power source to line 1

(see Figure 3 and Figure 10.1 – page 10)

Installing Jumpers for installing Two Speed Pump

To install a two speed pump you must use Relay 1 (filter pump) and Aux 1 relay. Three jumpers need to be installed:

Jumper 1 – Relay 1 Line 1 to Aux 1 Line 1 (see Figure 3 & 10.1)

Jumper 2 – Relay 1 Line 2 to Aux 1 Line 2 (see Figure 3 & 10.1)

Jumper 3 – Relay 1 Load 2 to Aux 1 Load 2 (see Figure 3 & 10.1)

5.3.3 Installing Variable Speed Filter Pump Power Connection

Connect power to the to "Filter Pump" relay 1 (see Figure 10.2)

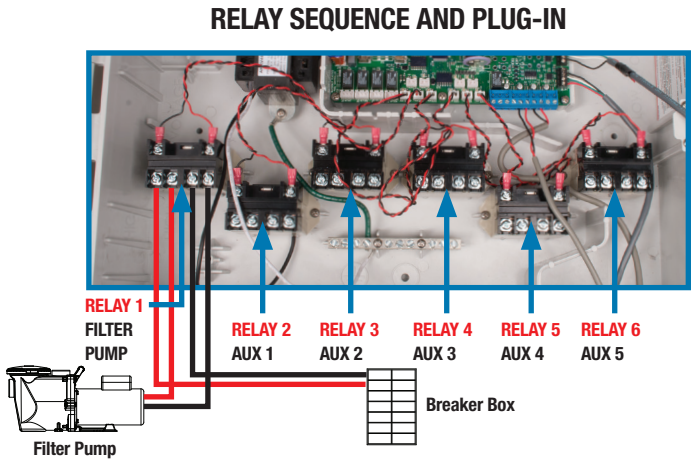

Figure 10.2. Relay Sequence & Plug-In

5.3.3.1 Installing Communication Port for Variable Speed Pump

Select the correct pump manufacturer and model from installer set up. Connect the Communication Cable to the OASIS variable speed connection terminal as shown below. (Figure 10.3)

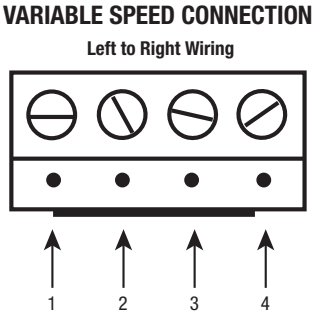

Figure 10.3

The color code and order of connections varies based on the pump manufacturer and model as shown in the following pictures. (Figure 11 – Figure 11.3)

WATERWAY VARIABLE SPEED CONNECTION TO OASIS

Figure 11

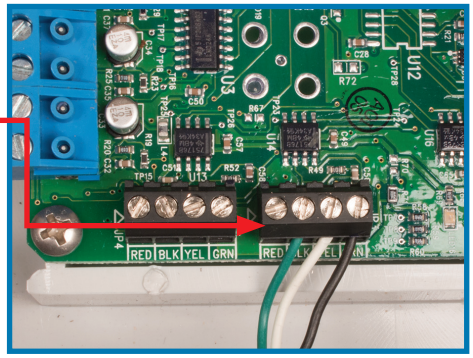

WATERWAY VSP CONNECTION TO POWER DEFENDER 165 PUMP

Figure 11.1

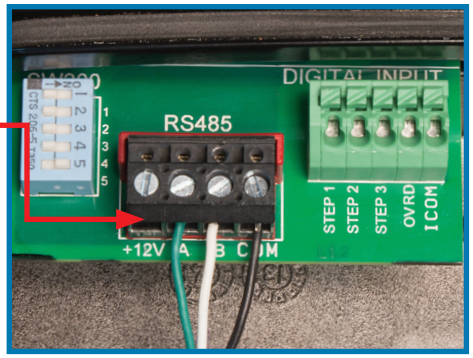

WATERWAY VSP CONNECTION TO POWER DEFENDER 270 PUMP

Figure 11.2

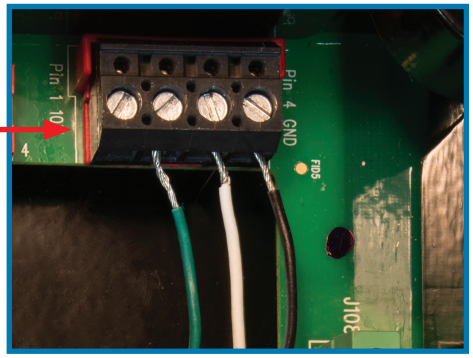

WATERWAY VSP2 CONNECTION TO POWER DEFENDER 300 PUMP

Figure 11.3 Note: Switch 3 must be moved to UP position before connection to Power Defender 300

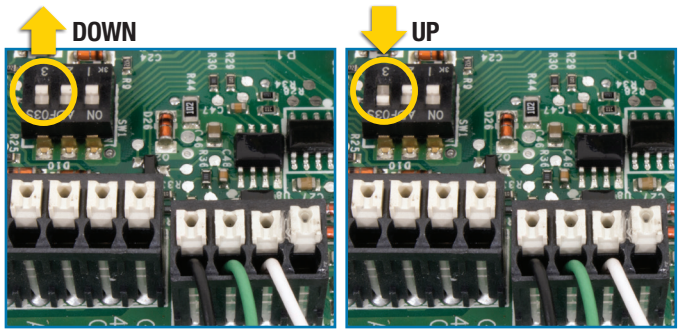

5.3.3.2 *Installing Communication Port for Jandy Pro Series VS pump

See Figure 12.

JANDY PRO SERIES VSP CONNECTION

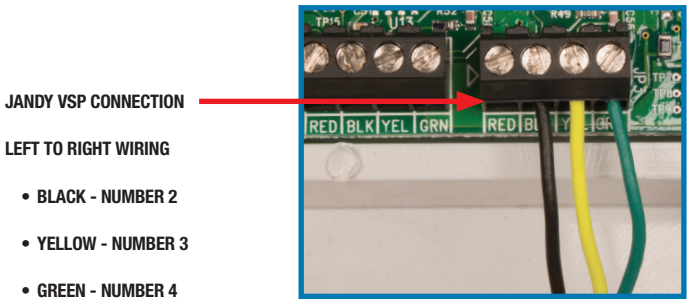

Figure 12. Jandy Pro Series VSP Connection to Pump

5.3.3.3 *Installing Communication Port for Pentair IntelliFlo® & Hayward EcoStar®

From the RS485 communication port (middle com port on the right side) connect Yellow wire of Pentair to pin label BLK (Black) and Green wire of Pentair to pin label YEL (Yellow).

- Be sure to turn off or disable all pump priming and timer schedules. This is necessary prior to connecting to Waterway OASIS.

PENTAIR INTELLIFLO® & HAYWARD ECOSTAR® VSP CONNECTION

HAYWARD PUMP SIDE CONNECTION

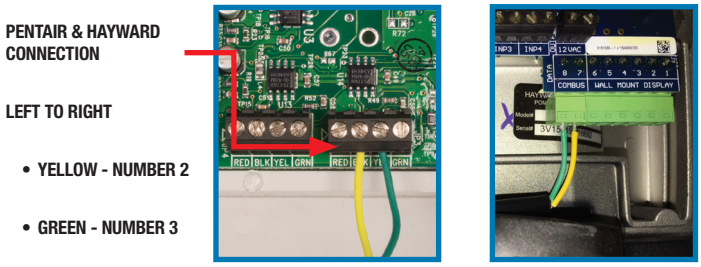

Figure 13. Pentair IntelliFlo/Hayward EcoStar Connection to Pump

5.4 Install Waterway Valve Actuators (WVAs) (if applicable)

You may wire up to four WVAs on the OASIS. Two (2) WVAs are included in SV and SR (Pool/Spa combo) kits. An additional WVA may be required on a pool/spa combination configuration to control a water feature or solar panel, for example.

NOTE: Read and follow complete installation instructions and safety information in the Waterway Valve Actuator owner's manual (included in the WVA packaging).

1. Install intake WVA and return WVA on equipment lines according to installation instructions in the owner's manual.
2. Feed intake WVA wire through the black low voltage wiring knockout.
3. Plug WVAs in as shown in Figure 10.4 Wiring Diagram.
4. Feed return WVA wire through the black low voltage wiring knockout.
5. Plug wires in as shown in Figure 10.4 Wiring Diagram.

* Other pump models with the same name may be connected in the same way.
* Waterway does not assume responsibility for software changes by other pump manufacturers.

Section 6. System Setup, Programming and Testing

All system programming and installation setup is performed through the OASIS user interface UI.

Figure 6. User Interface

Main Screen:

The main screen displays valve positions of the system, current time, water temperature, system status, and the status of the system accessories.

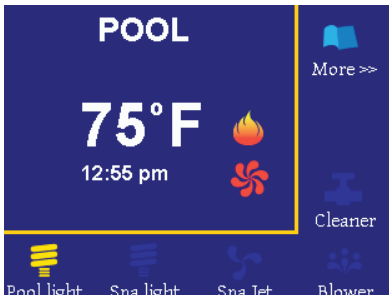

Pool Operation:

- **1 to 6 buttons:** Turn system accessories ON and OFF by pushing buttons 1 to 6 around the LCD display. The accessories function is shown above the buttons 1 to 4 and on the right side of the LCD screen for buttons 5 and 6. If there are more than 6 accessories functions, Button 6 will show "More>>" and when pushed, it will display a new list of functions for buttons 1 to 5.
- **P/S mode** will cycle system between "POOL – OFF" and "POOL" for a pool only system. For a Pool/Spa combo, it will cycle system between "POOL – OFF"; "POOL"; "SPILLOVER"; and "SPA". The appropriate valves will need to turn ON or OFF to put system in the correct mode and a message "Please wait 40s" will display on the panel when this happens. This message is updated every 5 seconds and it will clear when the valves completely stop in the correct position. At this time the main pump will turn ON if it is not in "POOL – OFF" mode.
- **POOL HEAT** will cycle system between "POOL – OFF" and "POOL" with heater enabled. Heater will turn ON one minute after main pump ON and if the water temperature is less than pool set temperature.
- **SPA HEAT** will cycle system between "POOL – OFF" and "SPA" with heater enabled. Heater will turn ON one minute after main pump ON and if the water temperature is less than spa set temperature.

- **Up and DOWN buttons** are used to set water temperature. The screen will display "Pool Set Temp" with the current pool set temp for all the modes except "SPA". In "SPA" mode, it will display "Spa Set Temp" with the current spa set temp. After 5 seconds without any change to the set temperature, the screen will reverse back to the Main screen with current water temperature display.

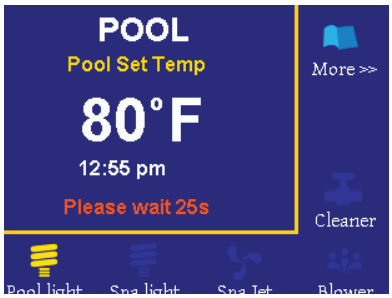

- **SERV button** will cycle system between "Service Timeout", "Service Mode", and normal mode. When pushed, this will immediately turn OFF all outputs and disable all timers in Service mode. The Service message is displayed on the main screen and will remain there until timeout (after 3 hours) in Service Timeout mode, or if the SERV button is pushed to exit SERVICE mode.
- **HOME button** return to Main screen from any other screen.
- **MENU button** used to enter the Menu setting screen.
- **LEFT/RIGHT button** used to navigate under Menu screens.

Panel Timeout:

- If the user is in Settings Menu and no button is pushed within 60 seconds, the screen will timeout, current screen settings will be lost and panel reverts back to MAIN screen.
- In MAIN screen, if no buttons are pushed within 30 minutes, the display will switch to display the Waterway Logo screen. Any button pushed during this time will reverse the screen back to MAIN screen. In Logo screen, if no buttons are pushed within 60 minutes, all LED and LCD lights will turn off and the panel goes to sleep. Any button pushed during this time will wake the panel up, LED and LCD lights will turn back on.

Menu Navigating:

- MENU button: used to enter settings menu and sub-menu screens. For screens with several settable fields, MENU can be used to navigate between different fields within the screen. For screens with the choice to enable or disable devices like the PARTY Mode device selection screen, MENU will be used to select or deselect the device.

- RIGHT button: most of the time this will function like the MENU button, used to enter the settings menu and sub-menu screens. For screens with several settable fields, RIGHT can be used to navigate between different fields within the screen.
- LEFT button: used to go BACK to the previous screen most of the time. For screens with several settable fields, LEFT can be used to navigate to the previous fields within the screen or BACK to the previous screen if it is at the first field of the screen.
- UP or DOWN button: used to navigate between different options or change the values of a field.
- HOME button: used to go BACK to MAIN screen in any settings screens. All settings are saved when this button is pushed.

Enter Settings screens:

Press Menu button to display a list of set up screens. Use Up/Down and Left/Right to navigate between various set up screens and HOME to exit to normal display temperature. Pressing "MENU" will enter settings and display 3 options: User Control, Timers, and Installer Setup. For a new system, the system will default to the Pool only system with a single speed pump for the main pump and no accessories. User can change these settings by entering Installer Setup.

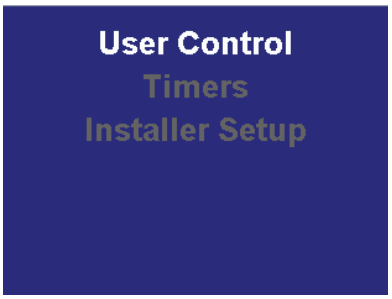

- **Installer Setup:** used for the system installer to setup the user system with appropriate accessories connections. Use UP or DOWN buttons to highlight "Installer Setup" option. After highlighting the "Installer Setup" option, press the MENU button, then UP button, then DOWN button, and the menu will show the "Installer Setup" screen with the option:

> **Assign Output:** use MENU or RIGHT buttons to enter the "Assign Output" screen. This screen will display two columns of information. The left column shows the physical connection label in the hardware board. The right column is the name of the accessory in the system.

  – Filter Pump power must connect to a "FIL PMP" relay label connector in the main board.

  – For Pool/Spa combo system, the intake and return valves must use the "J1 INTAKE" and "J2 RETURN" valve connector in the main board. For Pool only system, these two valves can be used for any generic valve for the user system.

  – If the system has a Solar heater, the Solar valve must use the "J3 SOLAR" valve connector in the board, otherwise this valve can be used to any generic valve for the user system.

  – If a row in a left column is highlighted, UP and DOWN buttons can be used to navigate between rows in this column.

  – MENU or RIGHT buttons can be used to navigate between the left and right columns and highlight the next field.

  – The right column will originally show "Not used" for all devices except "Filter Pump". To change the setting, use MENU or RIGHT buttons to highlight the appropriate field in the right column and then use UP or DOWN buttons to assign the accessory to a specific connector in the hardware board. Example: to assign a relay label "AUX2" to "BBQ Light" device, navigate to "AUX2" row and highlight "Not used" in the right column. Use the UP button to scroll to "BBQ Light" and then push HOME to exit or the MENU or RIGHT buttons to move to the next field to continue with the next setting. Now the AUX2 relay in the board will assign to the "BBQ Light" output, the "BBQ Light" label will show up in the Main screen display and the Timers menu automatically.

  – Some devices, when selected, will show a secondary screen for the device manufacturer (Pool light will allow user to select normal On/Off, Waterway, or another brand) or the Pool mode for that device (Cleaner valve will show normal On/Off or turn on in Pool mode, etc.). Use the UP/DOWN buttons to highlight and select the option in the secondary screen. Use the LEFT/RIGHT/MENU buttons to exit the screen.

  – If any selection changes are made in the "Assign Output" screen, when the user exits this screen, a system will reset after 2 seconds to initialize the system with the new selection.

> **Freeze Protection:** this screen will allow the user to enable or disable freeze protection and set the temperature for freeze detection. With "Freeze Protection" highlighted, press the MENU or RIGHT buttons to enter the "Freeze Protection" screen. In this screen, use the LEFT/RIGHT/MENU buttons to navigate between the fields and the UP/DOWN buttons to change the values.

> **Clear All Settings:** this will allow user to clear all setting to manufacturing default. With "Clear All Setting" highlighted, press MENU or RIGHT buttons to select the choice, then press LEFT or HOME buttons to execute. If user select YES, a system will reset after 2 seconds to initialize the system to manufacturing default setting.

> **Board Test:** use at manufacturing only. Do not execute with all devices connect to the board

- **User Control:** these are settings that the user can change at any time. Highlight "User Control" and press the MENU/RIGHT buttons to enter the setting. In this screen, use the UP/DOWN buttons to highlight the desired option to change, then press the MENU or RIGHT buttons to enter. LEFT button will goes back to the previous screen. There are several options under this screen:

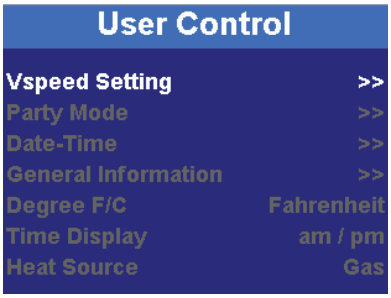

> **Vspeed Setting:** this option is selectable if the system is setup for variable speed pump for the filter pump in the "Assign Output" screen. These are the speed settings for various functions if the user manually presses the function button. Use the MENU/LEFT/RIGHT buttons to navigate to the appropriate field, then use the UP/DOWN buttons to change the value. In this screen, "Prime" is for the start up speed of the pump from OFF stage. Set the Prime duration to zero minutes if prime is not needed.

> **Party Mode:** this is used to set up one button push that will turn on multiple outputs. In this screen use the UP/DOWN buttons to select the pool mode, then press the MENU/RIGHT button to enter the accessories selection menu. In the accessories selection menu use the UP/DOWN buttons to navigate to an accessory then use the MENU/RIGHT button to select or deselect the accessory. LEFT button will go back to the previous screen.

> **Date-Time:** set up the date and time for the pool. With Date-Time highlighted, press MENU/RIGHT to enter the Date-Time setting. In this screen, pressing MENU/RIGHT will move and highlight various fields that the user can change the settings of; UP/DOWN to change the values and LEFT to go back to the previous field or screen.

> **General Information:** displays general information of the pool. With General Information highlighted, press MENU/RIGHT to enter the General Information menu. Use LEFT to go back to the previous screen.

> **Degree F/C:** Select to display the pool temperature in Celsius or Fahrenheit. With Degree F/C highlighted, press MENU/RIGHT to toggle the selection between Celsius or Fahrenheit.

> **Time Display:** display pool time in am/pm or 24-hour mode. With Time Display highlighted, press MENU/RIGHT to toggle the selection between am/pm or 24-hour selection.

> **Heat Source:** this option is only changeable if a Solar valve or Heat Pump is selected in the "Assign Output" screen. This option will allow the heat source or combination of heat source use to heat up the water in the pool. With Heat Source highlighted, press MENU/RIGHT to choose the heat source.

> **Languages:** to select various languages for the pool display. With Languages highlighted, press MENU/RIGHT to select a specific language.

> **Reset Network:** this option allow to clear the Wifi internal setting. With "Reset Network" highlighted, press MENU or RIGHT buttons to select the choice, then press LEFT or HOME buttons to execute.

- **Timers:** set up schedules to turn ON/OFF for every single function of the pool. The number of functions shown in this screen is dependent on the number of accessories that are used in the system. Highlight the "Timers" selection and press the MENU/RIGHT button to enter the setting. In this screen, use the UP/DOWN buttons to highlight the desired function to change, then press the MENU/RIGHT button to enter. LEFT button will go back to the previous screen. There are four schedules for each function that the user can set up. When the user enters a particular schedule screen, MENU/RIGHT will move to the next field, LEFT will move to previous field or previous screen, and UP/DOWN will change value of a highlighted field. All schedules are defaulted to OFF and changed to ON if the schedule duration is set to a non-zero time and with a date selected. Any function that requires the main pump to turn on will show the Speed setting for the pump in the schedule.

2200 East Sturgis Road, Oxnard CA 93030 • **Phone 805.981.0262** • Fax 805.981.9403
waterway@waterwayplastics.com • **www.waterwayplastics.com**

Designed, Engineered & Manufactured in the USA.

810-2110.0219

©2019 Waterway Plastics